TALLINNA TEHNIKAÜLIKOOL
TALLINN UNIVERSITY OF TECHNOLOGY

Faculty of Mechanical Engineering

Department of Mechatronics
Chair of Mechanosystem Components

MHE70LT

Teet Praks

ELECTRIC BICYCLE FRAME DESIGN AND SUBSYSTEMS INTEGRATION

Master's Thesis

Author applies
for the degree of
Master of Science
in Engineering

Tallinn
2015

(The reverse of the title page)

AUTHOR'S DECLARATION

I hereby declare that this thesis is the result of my independent work.
On the basis of materials not previously applied for an academic degree.
All materials used in the work of other authors are provided with corresponding references.

The work was completed on Alina Sivitski's guidance

“.......”....................201….a.

The author Teet Praks

.... signature

The work meets the requirements for a master's work.

“.......”....................201….a.

Supervisor Alina Sivitski

.... signature

Permit to defense

Mart Tamre curriculum defense superior

“.......”....................201… a.

.... signature

TALLINNA TEHNIKAÜLIKOOL
MEHAANIKATEADUSKOND

Mehhatroonikainstituut

Mehhanosüsteemide komponentide õppetool

MHE70LT

Teet Praks

ELEKTRILISE JALGRATTA RAAMI PROJEKTEERIMINE JA ALAMSÜSTEEMIDE INTEGRATSIOON

Magistritöö

Autor taotleb
tehnikateaduse magistri
akadeemilist kraadi

Tallinn
2015

(Tiitellehe pöördel)

AUTORIDEKLARATSIOON

Deklareerin, et käesolev lõputöö on minu iseseisva töö tulemus.
Esitatud materjalide põhjal ei ole varem akadeemilist kraadi taotletud.
Töös kasutatud kõik teiste autorite materjalid on varustatud vastavate viidetega.

Töö valmis Alina Sivitski juhendamisel

“.......”....................201….a.

Töö autor Teet Praks

.... allkiri

Töö vastab magistritööle esitatavatele nõuetele.

“.......”....................201….a.

Juhendaja Alina Sivitski

.... allkiri

Lubatud kaitsmisele.

Mart Tamre eriala/õppekava kaitsmiskomisjoni esimees

“.......”....................201… a.

.... allkiri

TUT Department of Mechatronics
Chair of Mechanosystem Components

MASTER THESIS TASK SHEET

2015 academic year, spring semester

Student:	Teet Praks, 132236 MAHM
Curricula:	MAHM02/13
Speciality:	Mechatronics
Supervisor:	Teaching Assistant, PhD Alina Sivitski
Advisers:	Kristjan Maruste, CEO at COMODULE GmbH, +372 555 242 66 Michael Burger, Diplom Designer, info@michaelburgerdesign.de

MASTER'S THESIS TOPIC:

(in English) Electric Bicycle Frame Design and Subsystems Integration
(in Estonian) Elektrilise Jalgratta Raami Projekteerimine ja Alamsüsteemide Integratsioon

Thesis tasks to be completed and the timetable:

Nr	Description of tasks	Timetable
1.	**Problem statement and analysis**, including electric bicycle definition (and different types), patent research, market analysis, justification. Brainstorming new bicycle concepts. Component selection for picked concept. Outcome - narrow problem statement with overview of design limiting factors.	10.03.2015
2.	**Frame design**, considering design limiting factors, material selection, geometry definition, drop-outs, front fork, strength calculations. Outcome - drawings with main dimensions for manufacturing.	13.04.2015
3.	**Main subsystems design and overview.** Battery: cell and chemistry selection, battery pack attachment, enclosure, removability, seamless integration. Electronics: battery management system, GPS, GSM/GPRS, Bluetooth, accelerometer. Outcome - essential subsystems description.	27.04.2015
4.	**Systems integration.** Overall system architecture & wiring harness for subsystems - motor, battery, lights, electronics, wiring and frame design. Outcome - final diagram of electric bicycle general architecture.	11.05.2015
5.	**Summary and formalization of work** - written report for master thesis.	25.05.2015

Solved engineering and economic problems: The aim of the work is to design novel electric bicycle for urban commuters. Work is focusing on lightweight, yet affordable frame design and electrical components seamless integration into the bicycle frame.
Language: English

Application is filed not later than 12.05.2015

Deadline for submitting the thesis 22.05.2015

Student Teet Praks /signature/ Date 26.03.2015

Supervisor PhD Alina Sivitski /signature/ Date 26.03.2015

TABLE OF CONTENTS

PREFACE

Given thesis topic is driven by the need of a COMODULE GmbH - a company which is developing technology for the light electric vehicle industry. Throughout the work, knowledge of industry's specialists were taken into consideration. Most important of them were Kristjan Maruste (mechatronics *cum laude*) - engineering lead of the COMODULE GmbH and Michael Burger - experienced industrial designer who have years of experience with electric bicycles and have also defended a thesis on electric bicycle's topic. I would like to thank all of them for their invaluable contribution!

Additionally, a fresh view on the topic and important assistance was given by Alina Sivitski - doctor of philosophy from mechanical engineering.

1 INTRODUCTION

Given thesis topic is driven by the need of COMODULE GmbH - a company which is developing technology for the light electric vehicle industry. A light electric vehicle (LEV) is a land vehicle propelled by an electric motor that uses an energy storage device such as a battery or fuel cell, has two or three wheels, and typically weighs less than 100 kg. Most LEVs are and will remain electric bicycles. LEVs are one of the largest and fastest growing electric vehicle markets. [1]

COMODULE GmbH is a company specialised in developing hardware and software for LEVs - mainly central control units and battery management systems. Battery management system provides accurate fuel gauging and range calculation technology. Central control units act as a brain of the vehicle by allowing to receive and transmit commands between different vehicles' subsystems; then gather, send and analyse data and commands between end user, vehicle and manufacturer. Data is transmitted both to the smart phone application via Bluetooth and to the cloud platform in the server via GSM network. This allows manufacturers to manage warranties remotely and to analyse data from the streets to make better product development decisions. Value proposition for the end user is made by providing novel M2M interface as a smart phone application to interact with the vehicle, gather data and most importantly - to track the vehicle when its stolen (as it also has GPS module integrated).

During the last months, one of the subproject's objective at the company have been to develop its own LEV - ultimate electric bicycle concept. Main area of responsibility for current thesis author have been mechanical engineering of the bicycle, besides co-developing a best concept for the novel electric bicycle. Throughout the process it have kept in mind to question all the development decisions made so far by the industry's status quo and to develop own concept while keeping in mind market size, entry barriers, competitors, engineering excellence, international safety requirements, standards and technical restrictions.

Therefore the ultimate goal of the thesis is to propose a unique electric bicycle concept and most importantly - to think through engineering bottlenecks and provide technical documentation to prototype structural heart of the electric bicycle - a frame. Therefore following report is focused on lightweight, yet affordable frame design and developing general electrical system control architecture by choosing main microchips and subcomponents like batteries.

Following report in general is divided into three parts. First four chapters describe problem analysis, research on patents to understand state of the art technologies in the field, market analysis of currently available electric bicycles and finally narrow problem is stated. Next two chapters (six and seven) are dedicated to component selection (e.g. batteries and motors) to define design constraints and then developing frameset geometry, its 3D model and finally strength analysis based on various tests and input data. Finally, general control system architecture is developed.

2 MOTIVATION

"Managing urban areas has become one of the most important development challenges of the 21st century," have stated in a report compiled by United Nations - intergovernmental organization established after the Second World War to prevent another such conflict. According to predictions in United Nations report - today 54% of world's population lives in urban areas which is expected to increase to 66% by 2050. [2]

The challenge about managing urban areas which United Nations have raised is confirmed also by another worldwide agency - World Health Organization (WHO) which is concerned with international public health. WHO reports that in 2012 around 7 million people died - one in eight of total global deaths - as a result of air pollution exposure. [3]

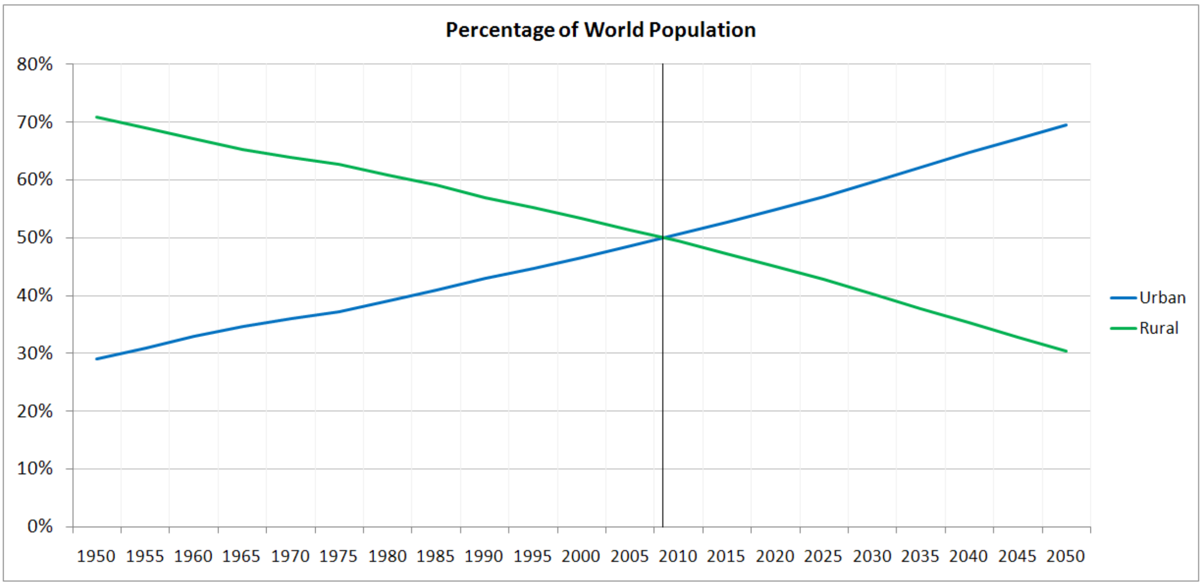

Figure 2.1. According to United Nations report - 66% of world's population lives in urban areas. Constant increase of people living in the urban areas have set new challenges to the human race. [2]

Therefore municipalities, governments, non-profit organizations and private companies are constantly looking for ways to develop smarter urban environments which would result in reduced CO^2 emissions, improved air quality, lower congestion, improvement in public health etc. One of the main areas of improvement in last decade have been investments in infrastructure. For example US federal funding for biking/walking has increased astronomically since 1990: nearly 5000% (highway funding in the same period, only 130%).

[4] Denmark's Copenhagen has set itself the ambitious goal of becoming the world's first CO2-neutral capital by 2025, and has rolled out an electric bike-sharing scheme, following the lead of other cities such as Paris, Barcelona and Mexico. [5] Copenhagen already have become one of the success stories in terms of sustainable transport: 50% of all citizens commute by bike every day and there are more bikes than inhabitants. [6] Public investments in infrastructure favoring sustainable ways of transport have succeeded also in other countries: according to European Cyclists' Federation, cycling is upswing in Europe - 2014's market values have increased 8% to 11% compared to 2013. [7]

Following thesis topic is also motivated by the ambitious goal to overcome the challenges the human race has in managing urban areas. Electric vehicles and two-wheelers have one of the major roles in overcoming the issues - managing over-populated cities and increasing air pollution. Electric two-wheelers are the best solution to convert to clean forms of transportation that require less space and maintenance. Both, author of the thesis and Comodule as a company, see that there's still plenty to do in the market of electric vehicles.

Figure 2.2.Municipalities investing heavily in green infrastructure projects to overcome challenges in managing urban areas. Madrid launched an electric bike-sharing scheme in 2014, following other cities like Paris and Barcelona. [5]

3 PROBLEM ANALYSIS AND STATEMENT

As explained in the previous chapter of motivation - bicycles in general are driving the revolution in overcoming the urbanisation challenges: over-populated cities and increasing air pollution. In order to get as much people using the sustainable form of transportation - it has to serve the objectives which people are looking for when choosing the daily form of transportation. In other words - they have to be designed to be practical - as opposed to bicycles which are primarily designed for recreation and competition, such as racing and mountain bicycles. By definition those practical bicycles are called utility bicycles. According to Wikipedia - utility bicycles are the ones which are used for short-distance commuting, running errands, shopping, leisure or for transporting goods or merchandise. [8] Consequently, very wide goal of the following work is to develop ultimate utility bike concept.

Therefore the goal of the following chapter is to analyse the (utility) bicycle developments over decades, then study if modern commuter bicycle should be electrically powered, learn about people people's perception and adoption on e-bikes, to give an overview of e-bicycle market and its players and then to state main disadvantages current electric bicycle have. The goal of the following chapter is to fully understand the problem, state of the art technology in the field and then ultimately - to narrow down the problem and state goals for development.

3.1 History of the bicycle

In order to design a bicycle, one has to understand the evolution of the invention throughout the history. Therefore following sub-section will give a very brief overview of the bicycle's history.

Despite claims to the bicycle invention in the end of the 15th century by the pupil of Leonardo da Vinci, first verifiable claims for a practically used bicycle originates from the beginning of 19th century. German Baron Karl von Drais patented his invention Laufmaschine (German for "running machine") in 1818. This was the first commercially successful two-wheeled, steerable, human-propelled machine (see figure 3.1, number 1). Drais' invention was motivated by the interest in finding the alternative to the horse. Several thousand copies were built and used, primarily in Western Europe and North America.

The first mechanically propelled 2-wheel vehicle was built by Kirkpatrick MacMillan - a scottish blacksmith, in 1839. (See figure 3.1, number 2). This concept had rear-wheel drive design using mid-mounted treadles connected by rods to a rear crank, similar transmission of a steam locomotive.

The first really popular and commercially successful design was revealed in the 1860s - its initial author is still unclear. It differentiated from previous inventions by attached cranks and pedals to the front wheel hub. The first metal frames allowed to reduce the weight and provided sleeker, more elegant designs, and also allowed mass-production. The patent of original pedal-bicycle with serpentine frame belongs to Pierre Lallement's. (See figure 3.1, number 3). In england, it earned the name of "bone-shaker" because of its rigid frame and iron-banded wheels that resulted in a "bone-shaking experience for the riders." [9]

Stability and comfort concerns of the "boneshaker" led to the large front wheel or "penny farthing". High-wheel bicycle (see figure 3.1, number 4) was invented by Frenchman Eugene Meyer. Those high wheels, ball bearings, solid rubber tires and hollow-section steel frames became standard and made the ride much smoother.

Although high-wheel bicycles were quite widely used, they were still lacking important features like safety, comfort and speed because it had direct front wheel drive which limited top speed. Therefore John Kemp Starley produced the first successful "safety bicycle" (a retrospective name), the "Rover" in 1885. It featured a steerable front wheel that had significant caster, equally sized wheels and a chain drive to the rear wheel. It had increased four key aspects - firstly steering by replacing high wheel; secondly safety by lower riding position; thirdly comfort by taking into use pneumatic tire (by John Dunlop) and lightweight diamond frame and fourthly speed by replacing direct drive with chain drive. See figure 3.1, number 5.

Bicycle historians call the period of the beginning of the 20th century "golden age" - cycling had became an important mean of transportation and increasingly popular form of recreation. By the 1940s bicycles were mostly replaced by the automobiles in the Western World. Bicycles have continued to evolve throughout the 20th century - derailleur gear changers, lighter and stiffer frames etc. Very common was special purpose bicycle developments - e.g.

for military use, cruiser bicycles, children bicycles, racing bicycles, mountain bicycles etc. Currently most widely seen bicycle type is a mountain bike (fig 3.1, number 7) - the first mass-produced mountain bike appeared in 1981.

The 21st century have seen a continued application of technology to bicycles in designing them, building them and using them. New types of materials and technologies have allowed to change them lighter, more comfort and aerodynamic. Many car manufacturers have entered to the bicycle market. See figure 3.1, number 8 for Peugeot concept bicycle design.

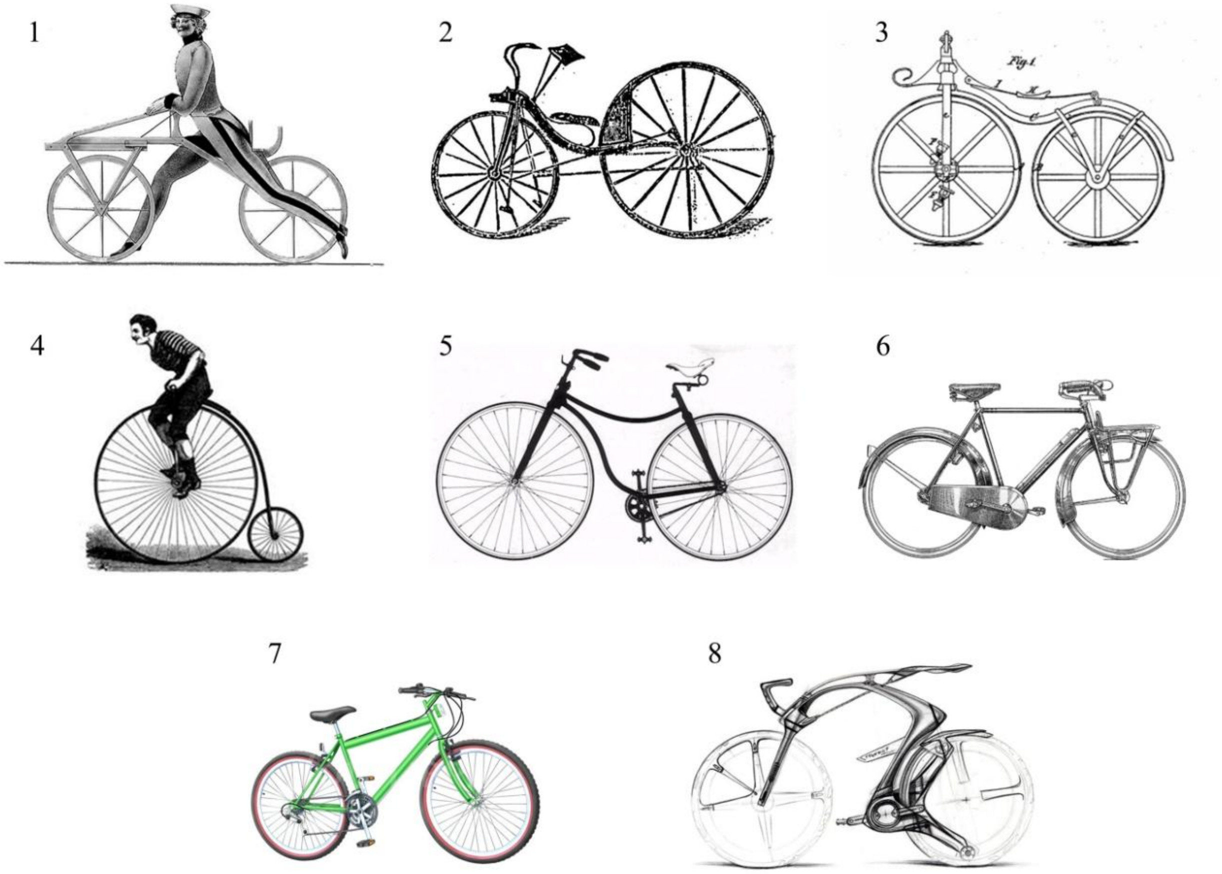

Figure 3.1. Bicycle evolution over centuries. 1 - "running machine" from 1818, first verifiable claim for a practically used bicycle [9] ; 2 - first mechanically propelled 2-wheel vehicle, built in 1839 [9]; 3 - first really popular and commercially successful design, patented in 1866, called "boneshaker" [10]; 4 - high-wheel bicycle invented in 1870s [11]; 5 - most important change in the bicycle history, new "safety bicycle" design (1890s) shifted their use and public perception from being a dangerous toy for sporting young men to being everyday transport

tool for men and women [12]; 6 - 20th century haven't brought any fundamental revolution into bicycle design, although bikes have improved in terms of speed and comfort (by gear changers, lighter frames etc) [13]; 7 - second half of the 20th century brought different bicycle concepts designed for special purposes, e.g. racing bicycle, BMX, hybrid bicycles and mountain bicycles (on the picture, started mass-production in 1981) [14]; 8 - we live in an age of cross-country bicycle racing and high-tech mountain bikes, car manufacturers are entering into the bicycle market, Peugeot concept bicycle on the picture. [15]

3.2 Electric bicycle

The idea of turning a bicycle from a human-powered vehicle to a motor-powered vehicle is strange for most of the people because we live in an age of bicycles which are designed for recreation and competition, such as touring, racing and mountain bicycles. Adding an external motor to the bicycle removes the recreational factor. On the other hand - as previous sub-chapter proved - bicycle invention from the beginning was motivated by the need for better form of transportation. As the overall task in the beginning of the project was to design an ultimate utility bicycle, therefore improve the current ways of transportation, following sub-section is seeking an answer to the question if modern utility bicycle should be electrically powered.

3.2.1 Definition

According to Wikipedia, an electric bicycle, also known as an e-bike or booster bike, is a bicycle with an integrated electric motor which can be used for propulsion. There is a great variety of e-bikes available worldwide, from e-bikes that only have a small motor to assist the rider's pedal-power to somewhat more powerful e-bikes which tend closer to moped-style functionality: all however retain the ability to be pedaled by the rider and therefore not electric motorcycles. [16]

Figure 2.2. There's a great variety of e-bikes available: from very simple and cheap (less than 1000 €) on the left [17] to powerful and expensive (more than 6500 €) off-road bicycles [18]. All of them however retain the ability to be pedaled by the rider.

3.2.2 Patent research & history of electric bicycles

The idea of electrically powered bicycle have been around since the conventional bicycle gained popularity. In 1881, Gustave Trouve (from France) is most probably the first one who wanted to conduct experiments with electric drive. He used a British tricycle called a Starley Coventry Lever Tricycle. [24]

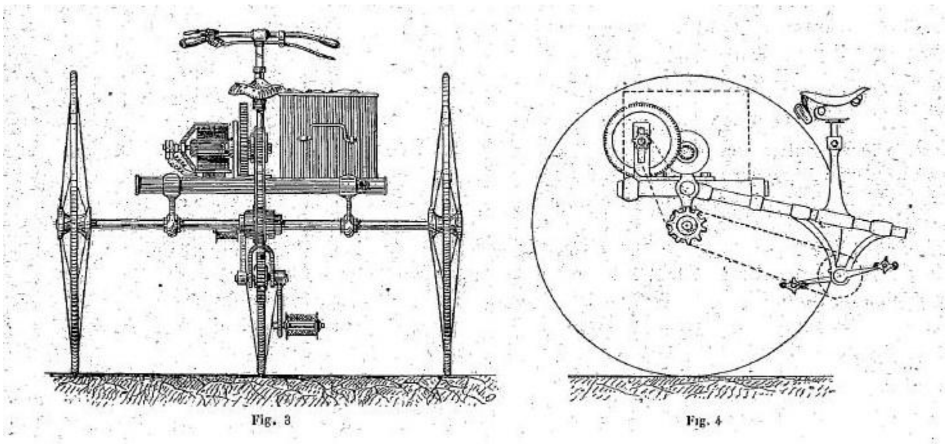

Figure 3.3. Sketch of a first electrically powered cycle, source: Eureka - Inventors Forum in 1892. [24]

Patent research revealed that first electric bicycle patent originates from 1895 (Ogden Bolton, Patent No. US 552271 A [25]) which rear hub is permanent-magnet direct-current (PMDC) radial-flux out runner. As patent is cited even in the 1990s - it can be assumed that patent still remains relevant today. Next important innovation in the field is from 1896 - which is brushed planetary-geared hub-motor - this was done in order to increase the power and efficiency by getting the motor to spin faster than the wheel. (Patent No. US 572036 A).

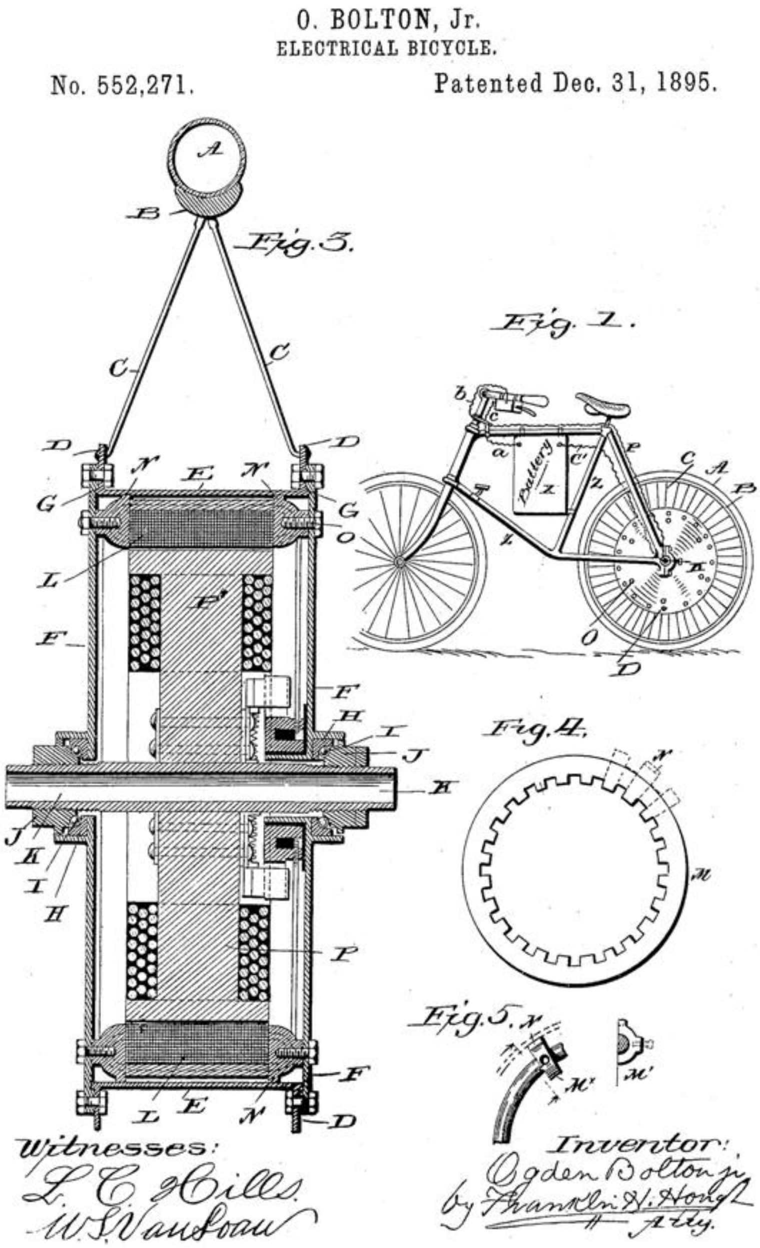

Figure 3.4. First electric bicycle concept patent from 1895 [25]

Next interesting innovation is from 1987 (patent US 596272 A [26]) because it's a mid-drive. It has separate motor - so it allows it to spin much faster than the wheel, and sprocket/chain gearing can greatly multiply the power density of the system.

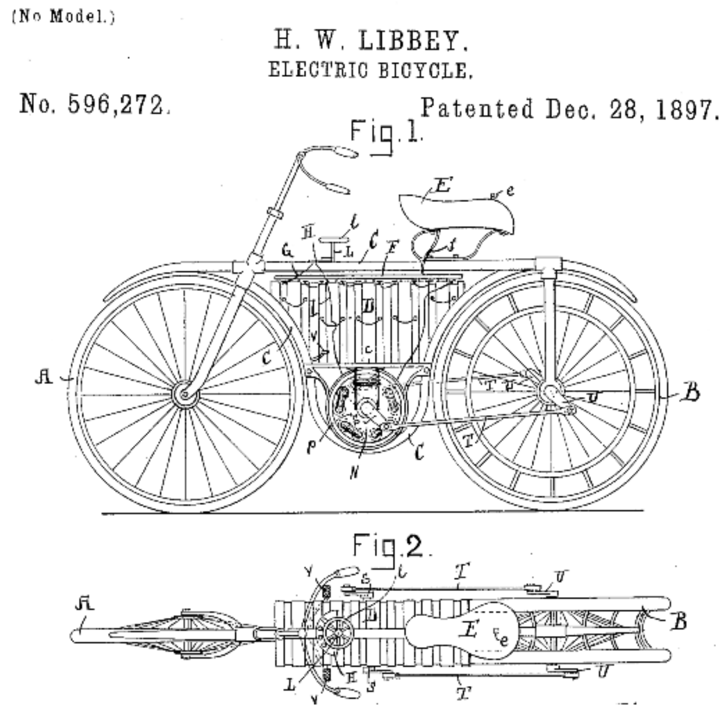

Figure 3.5. Very first electric bicycle concept with mid-drive. [26]

During the next century from first patents which were outlined, there were several other patents applied, although there weren't any commercially successful electric bicycle on the market in the 20th century. Following most important patents were selected and briefly explained, as each of them represent somehow unique approach to electric bicycle concept:

- Patent No US 598819 [27] from 1898 has a generator instead of a battery. The pedals spin a generator (dynamo), and the power from that dynamo drives a small motor. In the real life it turned out to be extremely inefficient design.
- Patent US 627066 from 1899 [28] is the direct-drive motor that is concentric with a shaft that powers a roller atop the rear tire to make a "friction drive". There are couple of friction drive systems available even today as conversion kits but according to test they are relatively inefficient [36];
- Patent US 656323 from [29] from 1900 is non-hub mid-drive concept. It uses frame-mounted jackshaft to power the left side of the wheel;
- Patent US 2179418 from 1939 [30] is noticeable because it is the first patent with front-wheel electric hub motor (which is quite widespread solution today), battery is mounted centrally very low and it uses induction motor instead of permanent magnets.

- Patent US 2457430 [31] from 1946 is special because it uses cylindrical motor attached to the seat tube which drives a 90° reduction, which then runs in-line with the bikes drive chain. Very similar concept is today applied by Fazua drive system (www.fazua.com);
- Patent US 3884317 [32] from 1975 is probably one of the most odd concepts - it has motor built into the bottom bracket and it has tiny battery (on seat stay tube) - it is stated that it is kept charged by constant charging of two tiny dynamos (marked as 16A and 16B on the drawing fig 3.6 no. 6) which are usually used to power the bicycle headlight;
- Patent US 4030562 [33] from 1977 represent the electric bicycle concept which is the most widespread nowadays and used by market leaders - Bosch and Panasonic. It is a compact drive system incorporated in bottom bracket with a cylindrical motor driving a 90° reduction. It also has freewheel - so that the motor is not driven when bicycle is pedaled with the motor unpowered.
- As most of the ideas revealed in previous patents have reached to the end user market by today in some form, there were many different approaches which haven't resulted as successful concepts. For example patent US 4280581 [34] from 1978 is spotlighted as commercially unsuccessful concept - author of the patent targets to overcome all the disadvantages which previous electric bikes have had. He improved for example center of gravity by bringing it down for better handling, free-wheeling opportunity, improved drive train efficiency, new design allowing for greater battery capacity and therefore longer range, better hill climbing ability thanks to gears, higher top speeds and very easy motor speed control. Although this particular concept never had a commercial success, it subsystems little innovations are in use even today. For example today successful e-bike drive train manufacturer Yamaha have cited to this particular patent.

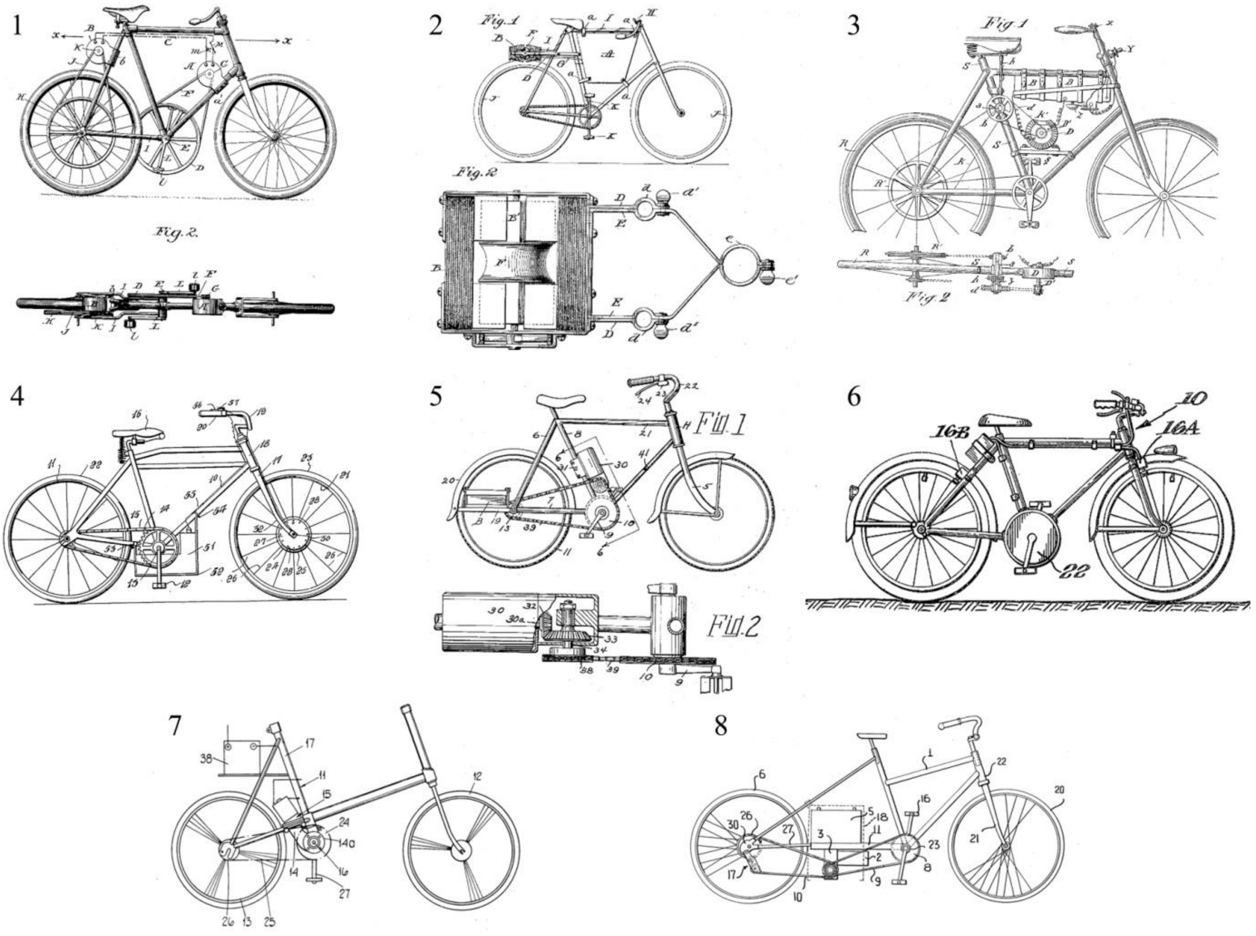

Figure 3.6. Overview of different electric bicycle drivetrain concepts patented. 1 - uses dynamo to power the motor instead of a battery [27]; 2 - uses "friction drive" to the rear tire [28]; 3 - non-hub mid-drive conept from 1900 which has frame-mounted jackshaft to power the left side of the wheel [31]; 4 - first patent with front wheel motor [32]; 5 - uses cylindrical motor attached to the seat tube and works under 90° reduction [33]; 6 - motor in bottom bracket and dynamos to power small battery [34]; 7 - concept which is most widespread today with motor in bottom bracket and motor driving a 90° reduction [35]; 8 - interesting concepts which have added value to all subsystems [36].

Although many electric bike concepts were developed during a 20th century, they started to become commercially available not before the beginning of 1990s. Before that electric motor and battery technologies weren't mature enough for reasonable performance and price ratio. According to one opinion [24] the successful era of electric bicycles started to evolve after 1995, when computer boom made a powerful neodymium magnets mass-produced, which brought their prices down. Neodymium magnets were used in computer hard drives. Another big influence at that time was convenient battery technology developments - lithium ion batteries for laptops and home electronics. The mass production of lithium batteries brought their prices down. One of the first commercially available model was manufactured by Yamaha in 1993, model called PAS.

Figure 3.7. One of the first commercially available pedal assisted bicycle - Yamaha PAS in 1993 [24]

3.2.2 Worldwide adoption

In order to analyze the relevance of electric bicycles - the worldwide adoption of them was firstly studied as this is the most obvious sign of market need for them. As previous sub-section revealed - electric bicycle technology was mature enough in the second half of the 1990s to start manufacturing in large scale. Therefore mass-adoption of electric bicycles started around that era - for example China have experienced explosive growth of sales e-bikes from 56,000 units in 1998 to over 28 million units in 2014 [21]. This boom was initiated mainly by Chinese local governments efforts to restrict motorcycles in city centers to avoid traffic disruption and accidents. In Germany the wide adoption have started later - sales of e-bikes have increased dramatically from 70,000 units in 2007 to 480,000 units in 2014 [7]. In contrast to China, Germany does not have any governmental incentives - e-bikes are gaining popularity and taking market share away from conventional bicycles.

According to Navigant Research, for-profit research organization: there are numerous market forces driving the global e-bicycle industry to be bigger [19]:

- Growing acceptance of e-bicycles as the fastest and cheapest way to adapt sustainable electric transportation;
- Increasing usage of bicycles for commuting purposes;
- Growing urbanization is pushing consumers toward alternative forms of transportation;
- Increasing maturity of products is encouraging acceptance of e-bicycles among those who may not have considered them in the past;
- Increasing quality and affordability of lithium ion (Li-ion) batteries;
- Continuing government support for sustainable transportation in key markets;
- Rebounding economy in North America and, to a lesser degree, Europe.

3.2.3 Public perception to e-bikes

Although there are numerous benefits of e-bikes, reasons why e-bicycle industry is booming and having high number of adoption rate, the public perception of new type of bicycles still remains a question. There are various researches made which study the public opinion about e-bicycles. One of the most convenient of them were conducted by the League of American Bicyclists in January 2015. According to survey data from the Transportation Research and Education Center at Portland State University, people use electric bicycles in different ways, particularly to increase their range and speed, to ride with less effort or more easily on hills, and to boost their health through increased physical activity. While electric bicycles don't provide the same health benefits as normal cycling, research from the University of Tennessee-Knoxville suggests that riding an electric bicycle provides health benefits similar to walking [21].

The research conducted by the League of American Bicyclists summarised that electric bicycles can [21]:

- be used by older people and people with physical challenges;
- functionally replace cars for a wide variety of trips;
- offer transportation options to people who can't drive;
- expand the number of people using bicycles for transportation;
- get more people biking more often;
- make family bicycling more accessible.

Their research totally approved that electric bicycles make sense and that powering the bicycle by electric motor has a wide positive impact. Their research results are summarized on figure 3.8.

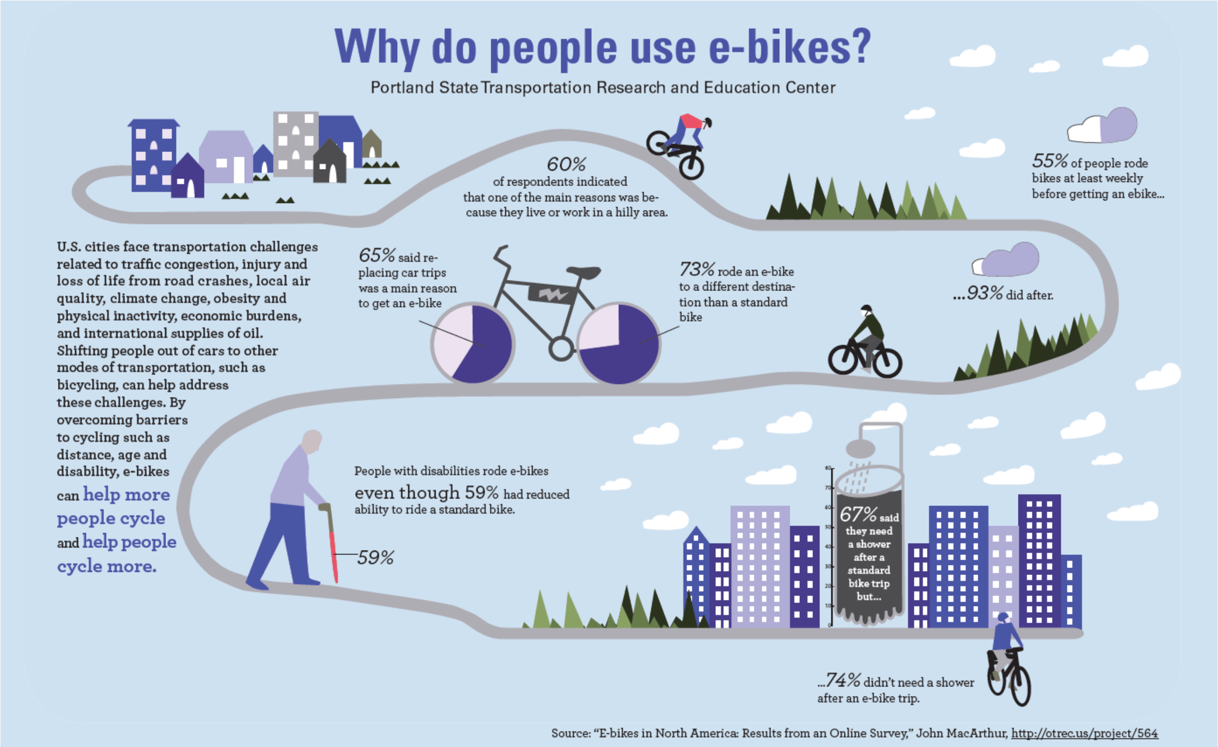

Why do people use e-bikes?

Portland State Transportation Research and Education Center

U.S. cities face transportation challenges related to traffic congestion, injury and loss of life from road crashes, local air quality, climate change, obesity and physical inactivity, economic burdens, and international supplies of oil. Shifting people out of cars to other modes of transportation, such as bicycling, can help address these challenges. By overcoming barriers to cycling such as distance, age and disability, e-bikes can help more people cycle and help people cycle more.

60% of respondents indicated that one of the main reasons was because they live or work in a hilly area.

55% of people rode bikes at least weekly before getting an ebike...

...93% did after.

65% said replacing car trips was a main reason to get an e-bike

73% rode an e-bike to a different destination than a standard bike

People with disabilities rode e-bikes even though 59% had reduced ability to ride a standard bike.

67% said they need a shower after a standard bike trip but...

...74% didn't need a shower after an e-bike trip.

Source: "E-bikes in North America: Results from an Online Survey," John MacArthur, http://otrec.us/project/564

Figure 3.8. According to the research conducted by the League of American Bicyclists, propelling a bicycle with electric motor, is very relevant and new trend in commuter and utility bicycles. [21]

Additionally, another reasearch, conducted by "Presto Cycling" [22], revealed that most typical pedal-assisted bicycle user is city commuters (61.4%), followed by elderly and less sporty people.

3.3 Market Overview

According to Navigant Research [19], the market of e-bicycles is expected to grow at a modest compound annual growth rate (CAGR) of 2.7% between 2014 and 2023 under base or most likely scenario. North America, Western Europe, and Latin America are all showing signs of fast growth (6.8%, 12.3%, and 9.5% CAGRs, respectively). Western Europe is currently the second-largest e-bicycles market (behind China), with nearly 1.2 million sales in 2014 expected to increase just over 3.3 million by 2023. North America has surpassed the

Middle East as the third-largest market in the world, and e-bicycle sales in the region are expected to grow to nearly 286,000 units by 2023.

The large Chinese market is expected to reach 28.8 million e-bicycle sales in 2014 under Navigant Research's base scenario, which represents 91% of the total global market of 31.7 million units. Overall, the global e-bicycle market is expected to reach 40.3 million units in 2023, with China representing 85% of the total market. This growth in demand is expected to result in revenue for global e-bicycle sales of $13.5 billion by 2023. Under Navigant Research's aggressive scenario, in which e-bicycle become a stronger alternative to passenger vehicles in urban environments, global e-bicycle sales could reach as many as 44.4 million units annually by 2023.

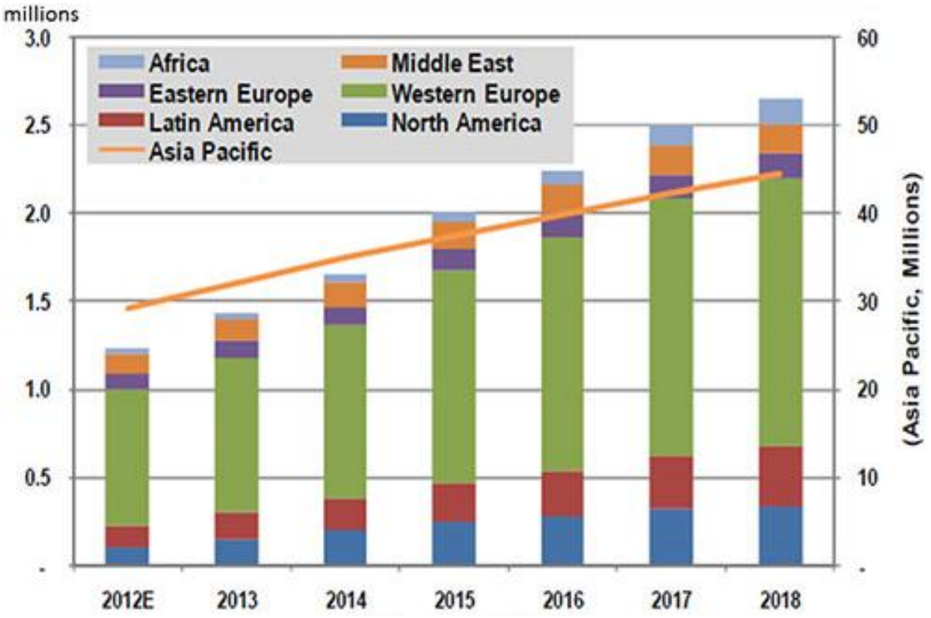

Figure 3.9. Electric Bicycle Sales by Region, World Markets: 2012-2018, by Navigant/Pike research [19]

With the market evolving quickly, a plethora of manufacturers - companies varied as Europe's Accell Group, Chinese exporters and even auto giants - competing. Daimler's Smart brand is offering zero percent financing on it $3,000 e-bike in Britain, while BMW introduced its own e-bike for about $3,600 this year. The typical e-bike sells for about $2,700 in Europe.[23]

3.4 Electric bicycles today

Electric bicycle market, especially in Europe, is very young. Therefore there are many players in the area - from very small companies manufacturing up to 100 units a year to large corporate brands which sell hundreds of thousands of units a year. So is the bicycle's price range very wide - covering everything from cheap Chinese bikes of 900€ to niche bikes of 8,000 €. There's even no clear vision of the best technical concept of the vehicle on the market. The variety of technical concept is almost as wide as there were different patents outlined in paragraph 2.2.2.

Majority of the e-bicycles available can be differentiated as following:

- pedal-assist only: motor operates only when user is pedaling (also called pedelecs);
- power-on-demand and pedal-assist: motor operates either by pedaling or throttle control;
- power-on-demand: motor operates only when throttle is used.

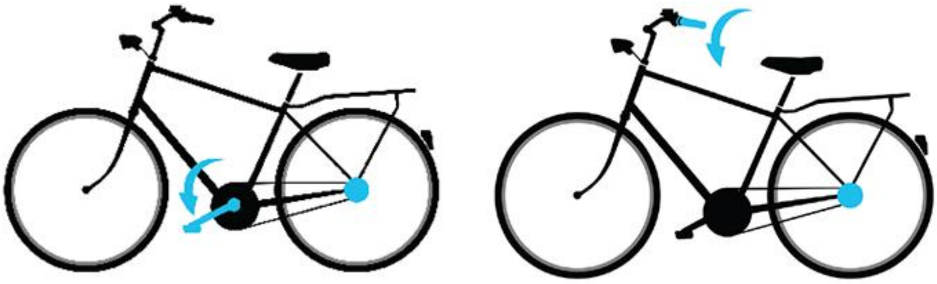

Figure 3.11. Pedal assist bicycle (pedelec) on the left and power-on-demand bicycle on the right

Also, there are e-bicycles which use:

- front hub motor (both direct drive and geared drive)
- rear hub motor (both direct drive and geared drive)
- mid-drive motor

Also, in different areas of the world, there are different legal definitions of electric bicycles, as outlined in table 3.1.

Table 3.1. E-Bicycle Definitions by Region/Country, World Markets [16]

Region/Country	Top Speed km/h	Electric Motor Size W	Other Requirements
United States	< 32	max 750	Has operating pedals
Western Europe	< 25	max 250	Motor operates during pedaling only (pedal-assist)
China	≤ 20	no limit	Has operating pedals; 40 kg max weight

In order to study advantages and disadvantages of different utility/commuter (electric) bicycles available on the market, it was conducted a thorough testing of different electric bicycle concepts. This have done by visiting different electric bicycle shops, like "WingWheels" in Berlin, Germany and "E-Motion in Munich", Germany. Also great variety of bike fairs have been visited - for example Eurobike in Germany; Bike Testing Days in Amsterdam, Netherlands; Essen Bicycle Show in Germany and Taipei Cycle Show in Taiwan. As focus of current work isn't on testing existing product, only overall conclusions of tests were made in next chapter (3.6).

Also, various electric bicycle reviews have been analysed. For example one of the best source for comprehensive tests and its results is provided by ExtraEnergy.org - a non-profit organization which tests e-bicycles and organizes promotion for LEVs worldwide. Additionally, ADAC - German automobile club have conducted test to 16 e-bicycles, 9 out of them failed in different areas [37]. Widely known technology magazine Wired sums up the bicycle by saying that "e-bikes get a bad rap, and deservedly so. Early models were ugly, heavy, repair prone, and expensive." [38] There's no profound analysis presented within this thesis as this is not the focus of the work. Conclusions of the tests are outlined in the next subsection.

Figure 3.12. Comprehensive testing of different kind of vehicles was conducted in order to fully understand the players at the market, advantages and disadvantages of different concepts. Upper left - Coboc e-bike; upper right - GoCycle foldable bicycle; down left - Electrolyte battery testing; downright - Electrolyte, YouMo and Feddz waiting for testing.

Within the thesis work - one of the important factors to have a good work is the novelty of the topic - therefore a market analysis of electric bicycles and scooters were conducted on Estonian market. Please see Appendix 1 for overview of electric 2-wheelers built in Estonia.

3.6 Conclusions & Problem Statement

Overall goal of the previous chapter was to give a profound insight into the field of (electric) bicycles. It did that by describing briefly the history of bicycle and then questioning if modern utility bicycle should be electrically powered. It was found that electric bikes are perfect match for city mobility. As electric bikes encapsulate perfectly the transport and mobility needs of 21st century lifestyles - electric motor can provide faster, sweat-free rides for further distances, at the same time still being healthy and nimble for short inner city trips, environmentally friendly and a lot cheaper than to get around than by car. Therefore thorough research was made on patented electric bicycle concepts, also looking for historical developments of e-bikes.

Although there are already hundreds of millions of e-bikes around, it is a market which is forecasted to grow even more rapidly in the future as it is both, gaining more popularity among people and government support. Market is still very scattered and crowded by various competitors, both SMEs and big corporations. There's no standards (as in automotive industry) and market is looking for consolidation in terms of best technical solution as there's a great mix of them available (very different motors, batteries and overall concepts).

Although there are many companies working in the area and many electric bicycles already on the road, tests conducted by the author and analyses made by external sources address following problems:

- existing solution price range is very high (from 900€ to 6,500€), higher end of the prices are unreachable for most of the people, cheap bicycles have extremely bad quality and are using old technologies;
- market is not matured (many competitors, very different perceptions on electric bicycles, very different technical solutions);
- electric bicycles look weird, have unattractive design;
- most of them are too heavy to take them inside for charging or they do not have removable battery;
- most of them aren't engineered and tested as they should making them repair prone;
- regardless of high prices most of them still have outdated user interface;

- high motor noise;
- people are afraid of range anxiety - they do not know how far they can go with the charge left in the battery;
- people are afraid of theft of their expensive bicycles.

Therefore following goals were set to design better electric bicycle for everyday commuter:

- attractive design at affordable price;
- well hidden/integrated battery and other electrical components
- design for light weight and low maintenance.
- novel human machine interface;
- healing range anxiety;
- anti-theft design.

4 FINAL CONCEPT SELECTION & DEVELOPMENT

Before one can start an engineering, a concrete design concept has to be defined. After profound technical and market research and defined problem in the previous chapter, a work group developed 6 different electric bicycle concepts which would resolve problems stated below. All of them differentiate of each other in terms of battery position, motor type, frame shape, component selection, final retail price etc.

Final chosen concept was called Ingenium. It is designed to be an ultimate urban racing machine. Geometric shape has its roots in track sports and in the world of cycle couriers who speed for miles through intense traffic. At the same time geometry is designed while keeping comfort in mind. The outcome is geometry with an athletic upright position that guarantees reasonable ratio of comfort and agility.

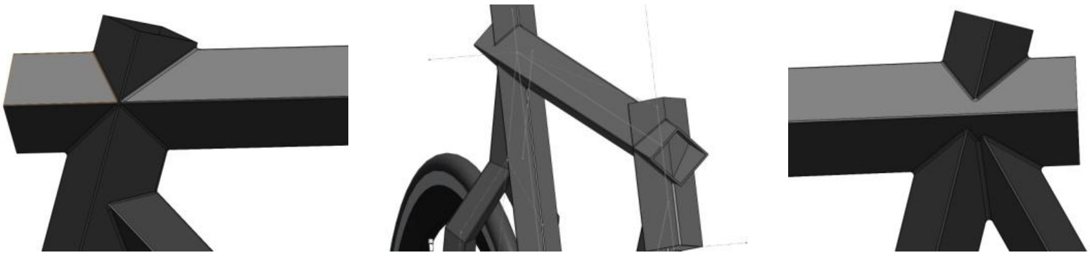

Figure 4.1. Designer's vision on unconventional bicycle design to use rectangular tubes.

By selected bicycle concept, following design restrictions were set for engineering:

- rectangular and triangular tubes for distinguishable look;
- rectangular and triangular standard tubes to keep costs low;
- surface finish: black anodization;
- rear and front light integrated into frame;
- battery seamlessly integrated into the frame;
- battery design to be removable;
- smart electronics including Bluetooth connectivity, GPS and GSM in the frame.

5 DESIGN CONSTRAINTS

Before design process, the most crucial components and materials have to be chosen which dictate the final design of the heart of the structural heart of a bicycle - a frame. Therefore this chapter is dedicated to component selection and decision's justifications.

5.1 Frame material & production method selection

As material selection and production methods are closely linked together, they also have to be chosen together. Both of them are important and have to be taken into consideration in design process. Therefore following subchapter will discuss both, material and production method selection for a bicycle developed within this work.

5.1.1 Material selection

Material selection was strongly influenced by competitive price. Across ages, there have been used wide variety of materials to produce bicycle frames. The most common material over times have been steel - different classes, from inexpensive carbon steels to high performance alloys. There have also been used wood (both solid and laminate), aluminum alloys, titanium, bamboo and plastics. An overview of common bicycle frame materials was compiled in table 5.1.

Table 5.1. Most common materials mechanical properties used for bicycle frame. [39]

	Modulus of Elasticity GPa	**Yield Strength** MPa	**Tensile Strength** MPa	**Fatigue Strength at 50,000 Cycles** MPa	**Density** kg/m^3	**Cost** €/kg
Aluminum 6061-T6	72	190-290	240-320	75	2,7	2-4
Aluminum 7005-T6	72	290	350	80	2,78	2.8
Steel 35SPb20	205	700-900	550	250	7,7	0.9
Titanium Grade 9	91-95	483-620	621-750	250	4,48	56.4
Carbon Fiber	Depends on fabric type and quantity used for manufacturing					

As the first objective stated for this work was to design a bicycle frame as affordable as possible, carbon fiber and titanium were excluded from the selection as they are the most expensive materials. Taking into account the second objective stated - design a frame as lightweight as possible, aluminum was chosen as the target material for the frame. Although steel has better modulus of elasticity, altogether aluminum is lighter and also allows stiffer design.

5.1.2 Production method selection

Depending on material selection, bicycle frames can be manufactured in many different ways. Each manufacturing method has its own peculiarities and requires different tooling. For example carbon fiber frames are manufactured by laminating carbon fabrics and then impregnating with resin. This results in expensive bicycle frames as producing carbon fiber frames is very labor intense and aluminum mold and raw materials are very expensive.

Most of the aluminum bicycle frames on the market are manufactured in following five steps:

1. extruding raw aluminum into tubes;
2. extruded aluminum tubes are hydroformed;
3. tubes are miter cut;

4. tubes are tungsten inert gas (TIG) welded;
5. T6 heat treated.

As aluminum hydroforming requires special tooling and therefore very expensive initial investment, the work group aimed to overlook different standard tubing options. There exists couple of companies in the world which provide standard aluminum hydroformed tubing for bicycle frames. But as special tubes produced for bicycle frames wouldn't fulfill the design requirements (impossible to integrate batteries and get visual look as required) presented in previous chapter. This means that manufacturing method selection was strongly driven by the visual design requirements.

Therefore, standard 6000 series aluminum profiles were chosen which fulfill the visual design requirements presented in previous chapter, provide the ability to integrate battery pack and electronics into the tube and additionally, provide proper mechanical characteristics. Rectangular tubes were chosen for main triangle and triangular tubes for front fork and rear triangle. Please find SAPA's EN-AW-6060 T6 mechanical properties data sheet in appendix 2. Ideally, if possible, frame's mechanical properties could be improved by using 7000 series aluminum tubes. Finally, proposed production method would be following:

1. extruding raw 6061 aluminum into rectangular and triangular standard tubes;
2. tubes are laser cut;
3. tubes are tungsten inert gas (TIG) welded;
4. anodizing as final surface treatment to increase resistance to corrosion and wear.

While bicycle frame's main construction is built by standard aluminum tubes which are laser cut and then welded together, fork ends, where the axle of bicycle wheel is attached, can't be manufactured in such way. They are mostly manufactured by water jet cutting, casting or CNC machined for small-series production. The goal for the following process would be to design fork ends that could be manufactured as easily as possible - most preferably water cut.

5.2 Wheelset

Besides general bicycle type, wheelset by dictating wheel size, is one of the most fundamental factors for bicycle design - influencing bicycle frame design, handling characteristics, fit and feeling of a bicycle ride. For example smaller diameter wheels, all else being equal, have higher rolling resistance than larger wheels. [40]

Standard wheel sizes have been changing over times. For example mountain bikes mostly had 26 inch wheels until recent years. For city bicycles, popular size have been 27.5 inches. Road racing bicycles have mostly used 29 inch wheels over times. In recent year, overall trend in the world have been towards bigger, mostly 29 inch wheels, but some producers are also experimenting with 32 inch wheels.

Smaller wheel size provide more responsive handling feel (allows to design smaller bottom bracket drop) and allows to use shorter chain stays - helping rider to make quicker changes in direction [41], more necessary for cross-country riders. On the other hand, smaller diameter wheels, all else being equal, have higher rolling resistance than larger wheels. [40] Bigger wheel sizes provide better stability and less rolling resistance. As the goal of the current work is to design a city commuter bicycle, meant for nonaggressive riders and paved roads, 29 inch wheels were chosen.

Selection and design of rim, spokes, hub, nipples and tires will not be discussed in this work as they are off the shelf components and their selection is rather trivial. If electric hub motor will be used, it is important to take into account that it has to be taken into account while choosing spokes and rims. Wheel hub motors require more robust spokes. In most cases they are even sold together as complete wheel set. Most important factors which limit the design here and have to be taken into consideration in design, are front dropout spacing which depends on hub selection and wheel size. Selected wheels require 100 mm of dropout spacing and wheel size is 29 inch or ISO622 according to ISO standard.

5.3 Crankset and bottom bracket

The bottom bracket on a bicycle connects the crankset to the bicycle and allows the crankset to rotate freely. [42] The crankset is the component of a bicycle drivetrain that converts the reciprocating motion of the rider's legs into rotational motion used to drive the chain or belt, which in turn drives the rear wheel. It consists of one or more sprockets attached to cranks to which pedals attach. [43]

Crankset selection is very important as it dictates various limits to the bicycle geometry design, e.g. bottom bracket drop, head tube angle and rake. Combination of bottom bracket and crankset determines chainstay design. Bottom bracket selection alone dictates the size of bottom bracket shell.

Selection of bottom bracket and crankset combination was based on three factors:

1. general electric system architecture - as it was in consideration to place torque sensor in bottom bracket;
2. general purpose of the bicycle - used for city commuting;
3. compromise between design concept and reasonable option as off the shelf product.

As thorough analysis description of bottom bracket and crankset combination would result in wrong effort and focus for thesis report, it will not be discussed profoundly hereon.

For final there were two options:

1. 68 mm bottom bracket with integrated torque sensor - NCTE model RT - because author has previous experience with particular product and is satisfied with it. Crankset to be used in combination with Shimano Alfine Octalink made for city commuters with crank arm length 170 mm. Required bottom bracket shell outer diameter would be 38 mm.
2. Shimano Alfine Hollowtech II crankset and bottom bracket combination (shown on figure 1.2) - driveside crankarm and the bottom bracket spindle are integrated unit and bearings are placed outside of the bottom bracket shell. It has exactly the same limiting sizes as previous combination: 170 mm of crank arm length, 68 mm bottom bracket shell width and shell outer diameter 38 mm.

According to final electric system architecture design, it was chosen motor with integrated torque sensor, therefore second option (Shimano Alfine Hollowtech II) was the final decision.

Figure 5.1. Shimano Hollowtech II crankset and bottom bracket [44].

5.4 Headset

Headset is the set of components on a bicycle that provides a rotable interface between the bicycle fork and the head tube of the bicycle frame itself. A typical headset consists of two cups that are pressed into the top and bottom of the headtube. Inside the two cups are bearings which provide a low friction contact between the bearing cup and the steerer. [45] Although it is crucial component for the bicycle, it seems quite simple at first look. After thorough analysis it was found 16 different headset standards [46] which are available. This makes the final decision more complicated.

Again, as the focus of this work is not in component selection, thorough analysis is not presented here. In general, there are three types of headsets in selection as presented on figure 5.2.

Figure 5.2. General headset types. Left - standard headset which has two bearing cups pressed into the headtube. Center - integrated headset have a proper taper machined into the headtube for bearing - therefore doesn't requiere a cup. Most of the chromly frames have this concept. Right - internal headset requieres a thin aluminium cup to be pressed into the frame. They are better than standard because it is very easy to install headset and easier to manufacture than internal headsets. Mostly used on aluminum race frames. [47]

Final decision was made in favor of Tange Saiki integrated headset which results in requirement for head tube outer diameter of 48 mm.

5.5 Motor Selection

Motor selection is essential in electric bicycle design as it defines the type of the electric bicycle. The goal of the following chapter is to calculate approximate necessary power of the motor and give an overview of motors available on the market and choose one out of them. It will not describe working principle, either different motor types as it is very voluminous topic and would result on wrong effort within this thesis.

In order to calculate required power which motor has to develop, a list of mass that has to be propelled by the motor was compiled in table 5.2.

Table 5.2. Range of Mass

Component	**Expected Mass** kg
Bicycle assembly	11
Motor and gear	5
Battery	4
Cyclist	80
Total Weight	100

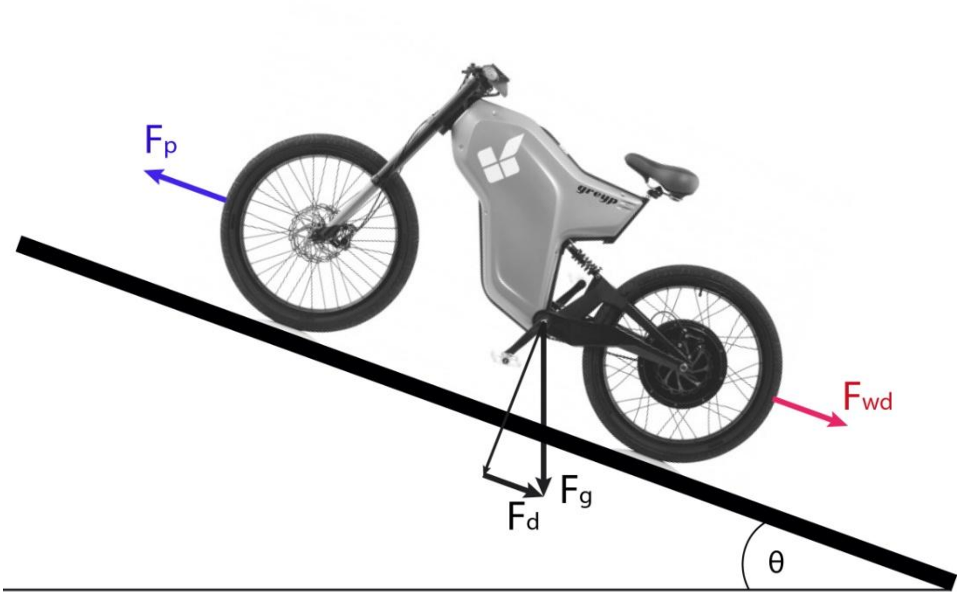

Figure 5.3. F_p - propulsion force; F_{wd}- wind and friction drag; F_g - gravitational force; F_d - force necessary to propel the bicycle; θ - elevation angle

Following assumptions were made for calculation:

$V_b = 20\frac{\mathrm{km}}{\mathrm{hr}} = 5.56\frac{\mathrm{m}}{\mathrm{s}}$ - desired speed to propel the bicycle by electric drivetrain

$\theta = 3.43°$ - desired elevation angle to come over (equals to 6% elevation grade)

Therefore,

$$F_d = m \cdot \sin\theta = 100\ \mathrm{kg}\ \cdot 9{,}8 \cdot \sin 3.43° = 58.6\ \mathrm{N}$$

$$P_d = F \cdot V_b = 58.6\ \mathrm{N}\ \cdot 5.56\frac{\mathrm{m}}{\mathrm{s}} = 326\ \mathrm{W}$$

Hence, in order to propel the bicycle only by motor power, it should be as powerful as 326 W. As in current work, goal is to design a pedal assisted bicycle, it is considered that peak power should be ~326 W as cyclist has to propel himself as well. Additionally, it is wise to take into account power levels permitted by law which is 250 W in Europe. Therefore following chapter is looking for motor of 250 watts of continuous power.

As there is still no clear vision of best electric bicycle concept in the world, motor manufacturers usually provide three motor types differentiated by its position on the bicycle:

1. Front hub motor
2. Rear hub motor
3. Mid-drive motor

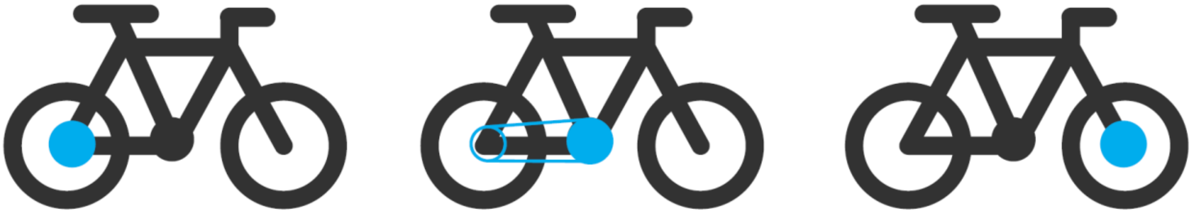

Figure 5.3. Different motor positioning concepts. Left: rear-wheel-drive; center: mid-drive motor; right: front-wheel-drive

There are also couple of "friction drive" manufactures (e.g. Rubbee Drive) which is a concept described in US Patent 627066 (see chapter 3.2.2) but as it has a lot of disadvantages (e.g. drivetrain can't be used in rain), this motor wasn't in selection. Also, there is one manufacturer, called Fazua, using very similar concept to US Patent 2457430 who has cylindrical motor attached to the down tube which drives a 90° reduction, which then runs in-line with the bike drive chain. As they are still in a very early phase (still prototyping) and not available for the market, they weren't taken into potential selection.

In order to choose which would be the best motor for a bicycle developed within this work, an overview of advantages and disadvantages in table 5.2 is presented.

Based on comparison in table 5.2, decision was made in favor of the rear hub motor. It doesn't require special frame design, therefore it's easier to change motor supplier in the future if needed, it provides the best riding experience and doesn't influence drivetrain components durability (as mid-drive does). Disadvantage include that rear hub motor results in bad weight balance and makes it uncomfortable to lift (back end heavier than front) and it is not as good for hill cross-country hill climbing as mid-drive is. But as it doesn't require to stick to one supplier, the compromise was made in favor of rear hub motors.

Table 5.2. Motor type selection by its position on the bicycle.

	Front hub motor	**Mid-drive**	**Rear hub motor**
Advantages	Very easy to install and remove the wheel for maintenance.	Removing both, the rear and front wheel is easy as there are no additional cables.	Natural way of riding a bicycle, rear-wheel-drive is the way people have
	Weight balance between front and rear is better than rear motor concept.	Best weight balance - low and centered.	Hard to "spin the wheel" (unlike with front motor) as weight distribution on rear end.
		Best for mountain bicycles as they have good hill-climbing characteristics.	Wide range of options available - different power levels & integrated solutions (with torque sensor and motor controller)
Disadvantages	Unnatural ride - feeling of being "pulled". Subjective view based both, on personal experience and magazine reviews.	Harmful for drivetrain components. As power is being transformed through the drivetrain, more wear is applied on drivetrain components.	Weight distribution on the rear end - bad for carrying and lifting the bicycle.
	Very easy to "spin the wheel" when road is slippery or has high ascent.	Requires custom frame design and commitment to one motor supplier from the very beginning.	
	Need for heavy-duty front fork.	Cheap motors have quite bulky ride feeling. Good motors are more expensive	

		than hub motors.	
	Only low power motors available (up to 250W nominal)		

After this, a thorouh analysis of available rear hub motors was done. Selection was done between 7 motors represented in table 5.3.

Table 5.3. Motor selection

	TDCM w/ SRAM	**TDCM IGH**	**TDCM Rear**	**GSD Cruise**	**Bafang RM G01.250.D**	**NeoDrives**	**BionX**
Weight kg	4,5	6,3	4,5	4,7	4,3	3,1	4,36
Dimensions mm	107, ∅ 159	54, ∅ 222	49, ∅ 198	142, ∅ 360	43, ∅ 122	135, ∅220	32, ∅360
Voltage V	36	36/48	36/48	36	24/36	36	48
Power W	250	250/350	250	250/500	250	250	250
Peak Power W	360	600/750	620	720	500	700	600
MaximuTorque Nm	55	36	45	37	30	32	25
Gears	Internal Hub Gears, 2 gears, automatic transmission	Internal Hub Gears, 5 gears, manual transmission	-	Suitable for cassettes up to 30-gear	-	-	-
Disc Brake	(requieres specific rotor)	+	+	+	+	(extra part requiered)	0
Motor Controller	Integrated	IDBike external	BAC Ne 500-48-35 external	Integrated	External, IDBike/BAC	Integrated	Integrated
Communication Interface	RS485	RS485, TTL232, CANBus	SOC: SMBus, I2C, Display. LINBus	BikeBus	RS485, CANBus	?	?
Torque Sensor	Integrated	NCTE-S-	IDBike	Integrated	Either	Integrated	Integrated

		BB-RT (bottom bracket)	TMM4 (on rear dropout		TMM4 or NCTE		
Price €	390	220 + 75 + 80 = 375	180 + 70 + 85 = 335	350	170 +120= 290	370	370
Comments	Very simple system - no display requiered. Everything necessary integrated. Commercially unsuccessful	5-speed internal hub keeps design clean Commercially not improved, Very	Very strong references from the market: Grace, Stromer, BESV, eFlow.	Very smooth ride, very nice engineering (compact solution), everything integrated	Based on ride experience with COBOC bicycle - very good motor. Very compact -> clean look	Daughter of big German corporation (www.alber.de)	Strong references like KTM, Trek, Grace. Very big outer diameter. Results in unattractive look.

Based on previous analysis, GoSwissDrive Cruise motor was chosen. It is very thought-out solution with motor controller and torque sensor integrated into the wheel hub which makes it easier to set up. It also has very competitive price, although it is manufactured in Germany. Based on different tests, it has very smooth ride experience and comes with preconfigured controller. Additionally, it has installation width of 135 mm which is standard for most of the motors on the market. So if actual bicycle is built, it would be easy to change them for comparison. Second option would be Bafang G01.250D as it is the most compact motor which allows very sleek design. Main disadvantage is that it requires external torque sensor and motor controller which results in more complicated system architecture.

Main design constraint for a frame regarding motor selection is rear dropout spacing of 135 mm and the need to take into consideration the motor dimensions while choosing spokes for the wheelset.

5.6 Battery

One of the most crucial core technologies driving the design of electric bicycle is its battery design. Compromise decision has to be done between factors such as sufficient range, seamless integration, frame/overall design restrictions to its dimensions and capacity. Larger wattage is outcome of all previous factors - it doesn't only increase range but ay also increase the uphill torque.

Based on very simple physics, it was calculated in previous paragraph that in order to propel a bicycle in rather conservative conditions, one has to use power of 326 W. Based on those assumptions and legal restrictions, there was chosen a motor with nominal power of 250W. Therefore, in order to drive a bicycle constantly on nominal power for one hour (~25 km), its battery has to be around 250 Wh of energy. Based on motor voltage range (max 42V), it can be easily calculate that desired battery capacity should be around $\frac{250}{42} = 5{,}95$ Ah.

Based on previous assumptions and calculations, following objectives were set for selection of battery cells:

1. Find a battery cell which dimensions would fit into the frame tube and battery chemistry with as high energy density as possible
2. Find a battery cell which could be basis to assemble a battery pack with characteristics required by selected motor:
   - nominal voltage 36 V
   - capacity ≈ 5.9 Ah
   - minimum continuous discharge current 9 A (taking into consideration that GSD nominal power is 250 W)
   - maximum discharge current 20 A (taking into consideration that GSD peak power is 720 W)

As requirements for the battery cells are quite straightforward, there was no need for profound comparison overview. If found battery was compliant to characteristics set previously, the rate of price and energy density was a decisive factor. The battery cell which fulfilled the specification needs and had the best energy density and price rate, was Boston Power Swing 5300. Please find its data sheet in appendix 3. Its main characteristics are as following:

- nominal capacity 5300 mAh;
- nominal voltage 36.5 V
- continuous discharge rate 13 A
- maximum discharge rate for 10 seconds is 25 A
- nominal cell weight 93.5 g
- energy density 207 Wh/kg

In order to satisfy the objectives set in the beginning of the chapter, a battery pack have to be assembled by connecting 10 battery cells in series, resulting in battery pack with capacity of 5,6 Ah and 36 V of nominal voltage.

5.7 Conclusions

Previous chapter described the most crucial component selection and decision's justifications. Those are all important as they set specific design limits which have to be considered when developing a bicycle frame. All the design limits are concluded in table 5.4 and visually shown on figure 5.4.

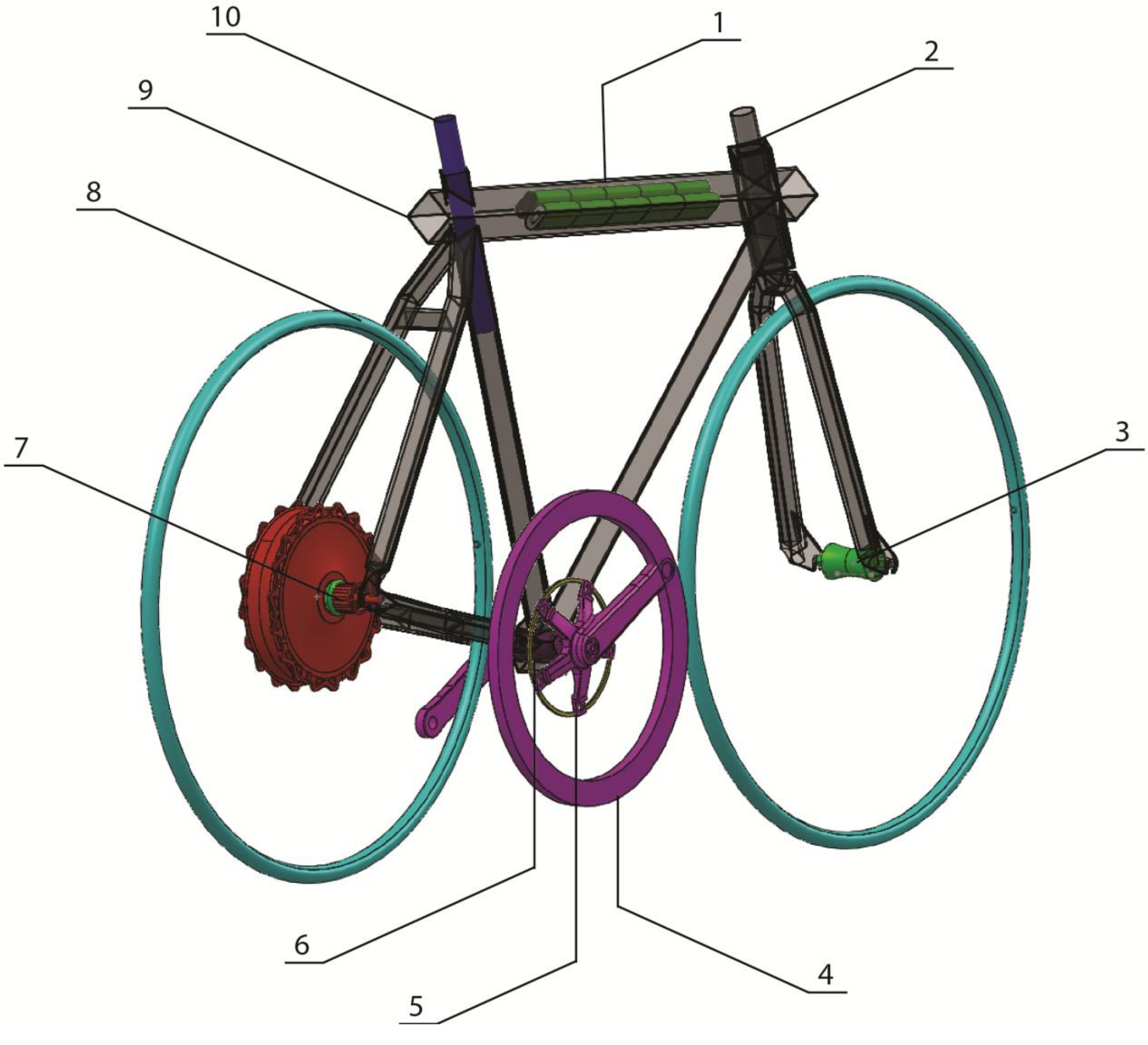

Figure 5.4. Bicycle design constraints. Please see table 1.8 for explanations.

Table 5.4. Bicycle frame design limiting factors.

Reference on fig.1.8	**Constraint**	**Measure**
9	Frame tube material	SAPA's EN-AW-6060 T6 rectangular and triangluar aluminum profiles
8	Wheel size	ISO 622 mm / 29 inch
3	Front dropout spacing	100 mm
7	Rear dropout spacing	135 mm
6	Bottom bracket width	68 mm
6	Bottom brakcet shell outer diameter	38 mm
4	Crank arm length	170 mm
5	Chainring diameter	80 mm
2	Head tube outer diameter	48 mm
1	10 battery cells to fit in top tube (10S1P)	37.3 x 64.8 x 19.2 mm
10	Seatpost outer diameter	25.4 mm

6 DESIGN PROCESS

Following chapter is dedicated to develop frameset geometry and bicycle frame model incorporating all the crucial subcomponents which were chosen in the previous chapter. Additionally, all the previous constraints and design concept had to be taken into account.

6.1 Bicycle frameset geometry

The basis of any bicycle is its frameset geometry. The ultimate goal of frameset is an energy-efficient machine. To achieve it, two fundamental design objectives must met. They are as follows [48]:

- **First objective is to establish a geometry that will fit the cyclist's anatomy** in such way as to facilitate the use of his muscles in the most efficient manner possible for propulsion. For urban electric bicycle commuter an aspect of comfort might be even more important than efficient muscle propulsion.
- **Second objective is to develop a design that will best fulfill the specific use** to which the bicycle will be put while wasting a minimum of cyclist's energy. For example road and touring bikes are the two broadest categories here.

According to legendary frame builder, Richard P Talbot, bicycle geometry design is a mixture of science, art, intuition and tradition. In other words - there are no concrete instructions how to come up with the best geometry. Even professional cyclists use the way of "buying and trying". Therefore this topic could provide enough material for another diploma thesis. Within this particular thesis, the goal of this subsection is to explain main geometry design factors, how they were chosen and how they influence handling characteristics.

Figure 6.1. Bicycle geometry also defines sitting position on a bicycle. Left: road race position; center: semi-upright position; right: upright position

6.1.1 Geometry Design Factors

It is important to notice that none of the following design factors weren't chosen at once. They were slightly changed throughout the design process according to tests of analouge bicycles and according to strength analysis results.

Bottom bracket height in perpendicular form the ground to the center line of the bracket shell. This is the main influencer on top tube height. Depending on the usage of the bicycle it could be changed a little - higher for off-road bicycles and lower for road rides as it improves the stability. This was the first parameter which was set as it depends on wheel size, bicycle type and selected crankset. $BBH = 276$ mm.

Seat tube angle is angle between seat tube and the ground - usually between 68° and 75°. Increased angles result in a stiffer ride while decreased angle provides more frame flexure which reduce shocks from the road. As it is everyday city bicycle, not a road bicycle, 72° angle was chosen. $SA = 72°$

Seat tube length is measured between bottom bracket axis and top tube centerline. Please find recomennded seat tube and top tube lengths according to P. Talbot in appendix 3. $STL = 530$ mm

Top tube length is distance between the head tube center line and the seat tube center line. It is related to the cyclist's arms and upper torso. Top tube length was chosen according to P. Talbot and experience on different bicycles. $TTL = 570$ mm.

Head tube angle is angle between the head tube and the ground. It is usually in the same range as seat tube angle but not necessarily the same. Head tube angle is strongly related to fork rake dimension. Higher the head tube angle, shorter the required fork rake for neutral steering and other way around. If angle is too steep and rake very short, it results in very stiff and ultra-sensitive steering. $HTA = 71°$

Fork rake is the distance between the head tube center line and the front wheel axle. Measured perpendicular to the head tube center line. As it was mentioned before - this measure is strongly related to head tube angle. Neutral steering means the fork will neither rise nor fall when its turned. Shorter rake means oversteer - more responsive bike which is easier to maneuver than neutral steering. Bigger rake means understeer - less responsive turning but better shock absorbing characteristics. Usually it is recommended to keep the rake size between neutral and oversteer. There are two formulas given to calculate a proper fork rake. Usually for touring (city bicycles) selected rake is between neutral and quick.

$$Y_{neutral} = R \cdot tan\frac{(90° - a)}{2} = 58{,}56$$

$$Y_{quick} = R \cdot tan\frac{(90° - a)}{2} - 19.05 = 39{,}51$$

Where

Y - fork rake, millimeters;

R - wheel radius, millimeters;

a - head tube angle, degrees

According to Talbot, it is recommended to select rake approximately midway between the neutral and quick. Road racing bicycles usually require more oversteer and therefore rakes should be based on quick steering. Therefore final rake was chosen of 44 mm based on previous recommendation and test rides with bicycles which geometry is known. Finally - $Y_{final} = 44$ mm.

Chain stay length is a distance from crank axis to the intersection of the seat stay and chain stay center lines. Usually shorter lengths are used for road racing for stiffer frame and longer ones for everyday commutes as it allows to use fenders and bigger tires. $CHL = 445$ mm.

After setting the chain stay, geometry was set. All the following are influenced by previous factors.

Fork length is strongly dependent on head tube angle, fork rake, headset selection and the wheel size.

Wheelbase is distance between the front and rear axles. Wheelbase influences several important bike handling characteristics. A short wheelbase yields a stiff but energy-efficient ride (on smooth surfaces) because little work goes into frameset flexure. By contrast, longer wheelbase framesets are more comfortable for long and touring rides - road shocks are greatly reduced by greater frameset flexure, resulting in better control and less fatiguing ride for cyclist and machine alike.

Top tube height is the perpendicular distance from the ground to the top of the tube. It doesn't have any influences on the handling characteristics but according to Talbot [1], at least one-half inch clearance should exist between the top of the tube and the cyclist's crotch while he is standing.

Final bicycle geometry was set based on

1. design constraints defined in previous chapter;
2. general goal to design city commuter bicycle with semi-upright riding position;
3. personal experience on bicycles with different geometry;
4. recommendations by P.Talbot [48]

Final geometry chosen for the bicycle is shown on figure 6.2 and table 6.1

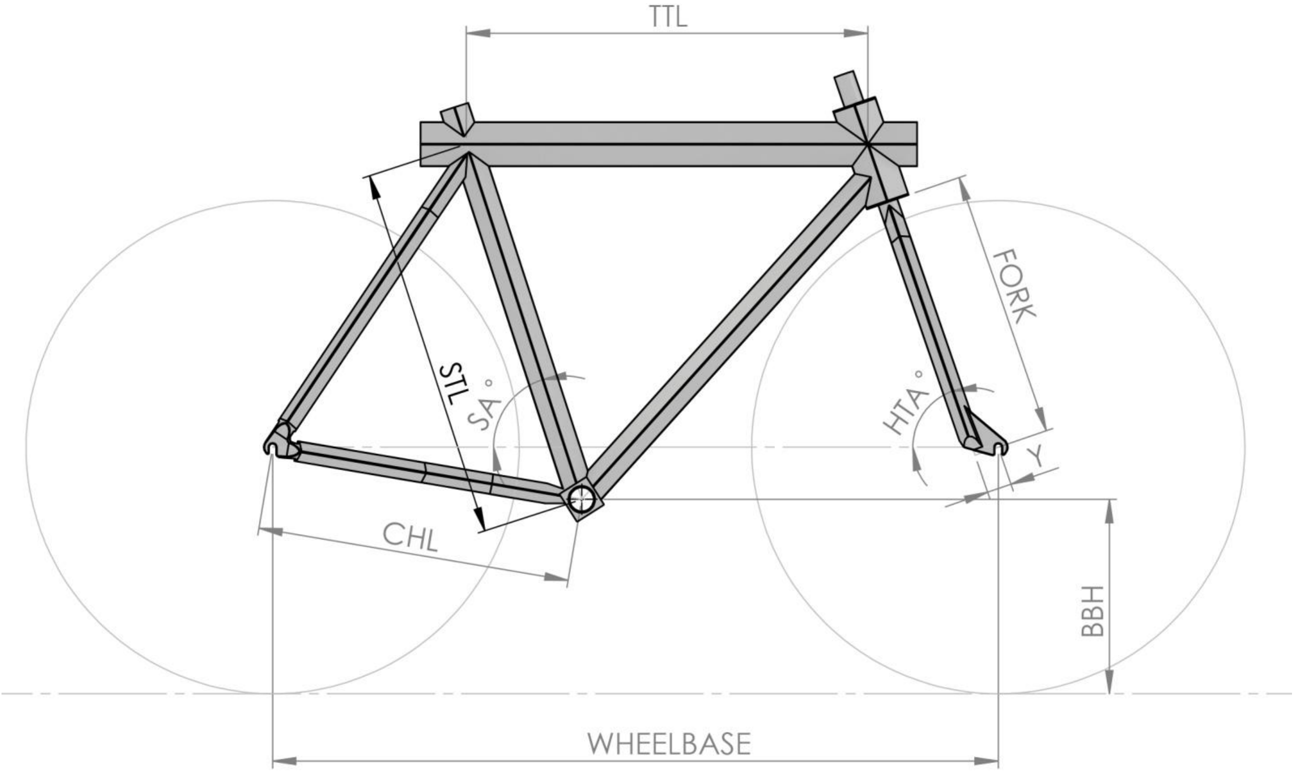

Figure 6.2. Bicycle frameset geometry. Please find dimensions and explanations in table 2.1.

Table 6.1. Final geometry for frameset

Reference on fig.6.2	**Factor**	**Dimension** mm
BBH	Bottom bracket height	276
STL	Seat tube length	530
TTL	Top tube length	570
Y	Fork rake	44
CHL	Chain stay length	445
$FORK$	Fork length	382
$WHEELBASE$	Wheelbase	1060
		Angle °
SA°	Seat tube angle	72°
HTA°	Head tube angle	71°

6.2 Modeling

After defining desired frameset geometry and fully understanding design constraints, a frameset 3D model was created. This was done by using computer aided design (CAD) software called SolidWorks 2013.

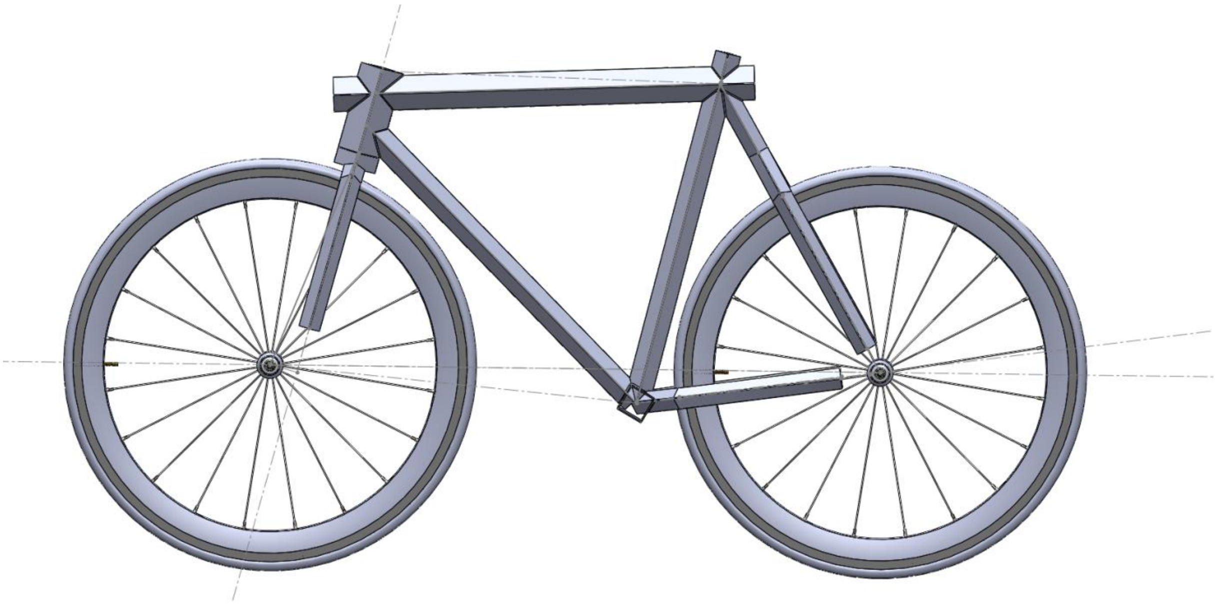

Figrue 6.3. Initial CAD model which geometry was changed later as it turned out to be too agresive. Also, front fork and rear diamond was redesigned for better strength properties and to meet design constraints. Additionally, forkends were designed later.

6.2.1 Headset and bottom bracket integration

As bottom brackets and headsets are designed to rotate by circular bearings, they are also made to fit in circular tubes. Therefore one of the main drawbacks of using rectangular tubing for bicycle frame, is headset and bottom bracket integration. So the design challenge here was to integrate headset and bottom bracket tubes into rectangular tube.

Final method which chosen in order to integrate bottom bracket/headset into the frame is the most simple - bottom bracket shell is integrated into the bottom bracket rectangular tube by welding laser cut pieces to the shell tube and then welded to the frame. Please see figures 6.4 and 6.5 for understanding.

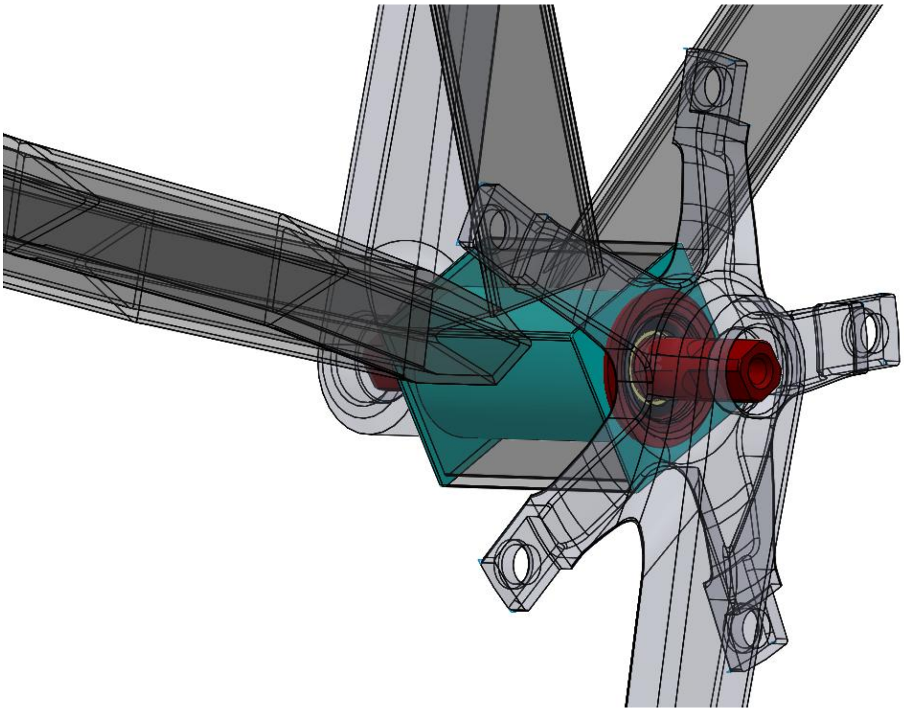

Figure 6.4. Bottom bracket integration into the rectangular frame. Blue part is part of the frame - assembled by welding of two laser cut peaces and tube which is meant for bottom bracket shell. Red part is bottom bracket cartridge. Please see see section view of figure x.x. for more details.

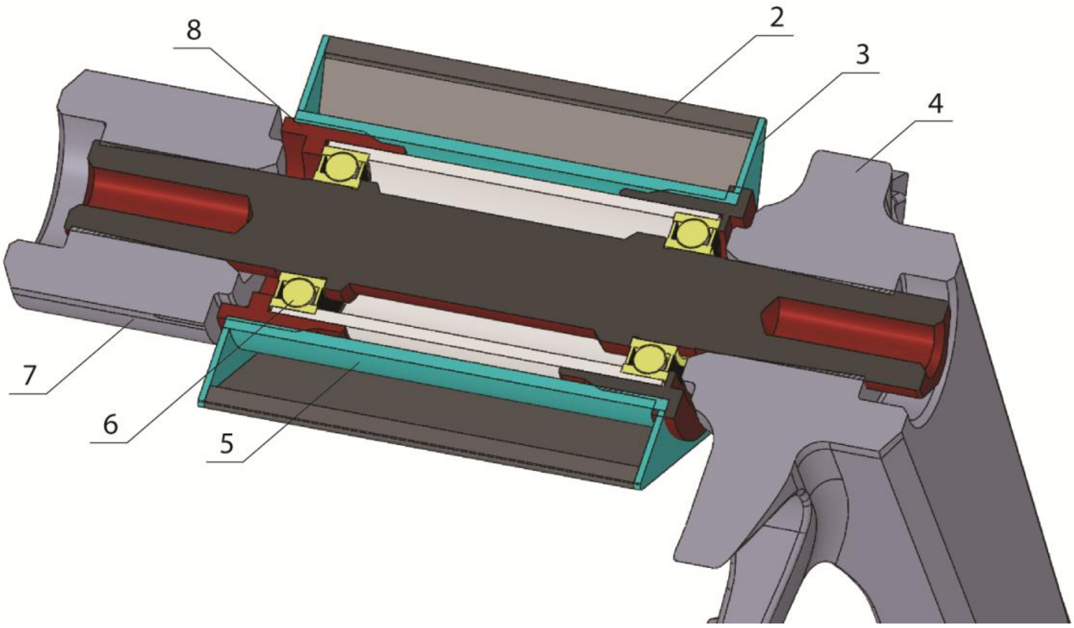

Figure 6.5. Bottom bracket, crankset and bicycle frame section view. 2 - rectangular frame tube; 3 - laser cut aluminum sheet to integrate bottom bracket shell; 4 - right crank arm; 5 - bottom bracket shell integrated into the rectangular tube; 6 - ball bearings inside the bottom bracket; 7 - left crankarm; 8 - bottom bracket cartridge

6.2.2 Battery pack & electronics integration

As proposed in the design concept in chapter four, electronics and battery should be integrated into the top tube of the bicycle. This simplifies wiring harness and also. Therefore 3D model was created based on idea concept. Please see figures 6.6. and 6.7 for understanding.

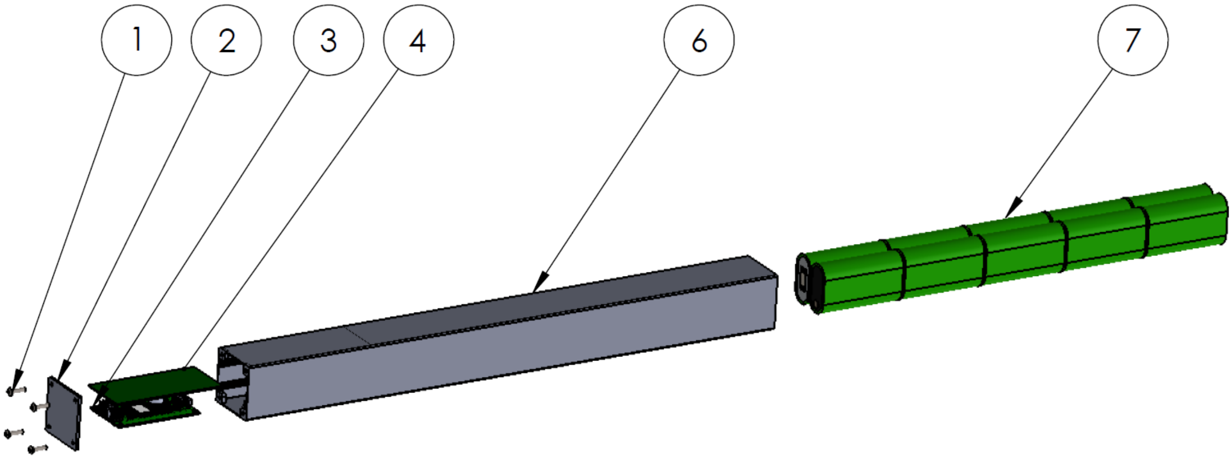

Figure 6.6. Battery pack and electronics assembly exploded view. 1 - bolts to close enclosure; 2 - enclosure lid; 3 - central control unit (see 8.2 for explanations); 4 - battery management system electronics; 6 - enclosure; 7 - Swing 5300 battery cells.

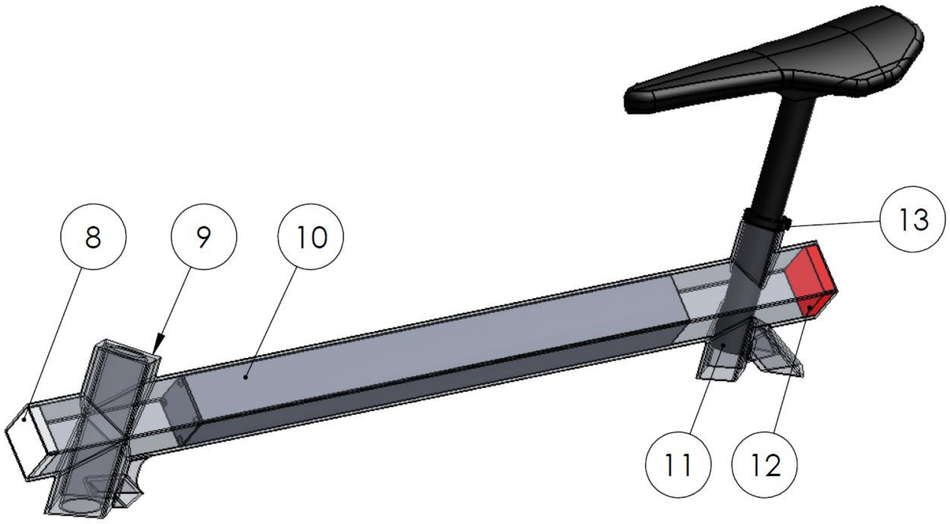

Figure 6.7. Bicycle top tube and electronics integration. 8 - front light integrated into top tube; 9 - head tube; 10 - battery and electronics enclosure (See fig. 6.6. for exploded view); 11 - seatpost; 12 - rear light; 13 - seatpost camp.

6.2.3 Design bottlenecks inspection

Before finalizing the design, bottlenecks of the model have to be looked over. Following main design constraints were checked:

1. Sufficient space between down tube and front wheel - dependent on head tube angle.
2. Sufficient space between crankarm and front wheel, or fender. Will interfere with the toes of cyclist's shoes when the fork is turned.
3. Sufficient space between crankarm and chainstay tube for pedalling (please see fig 6.8)

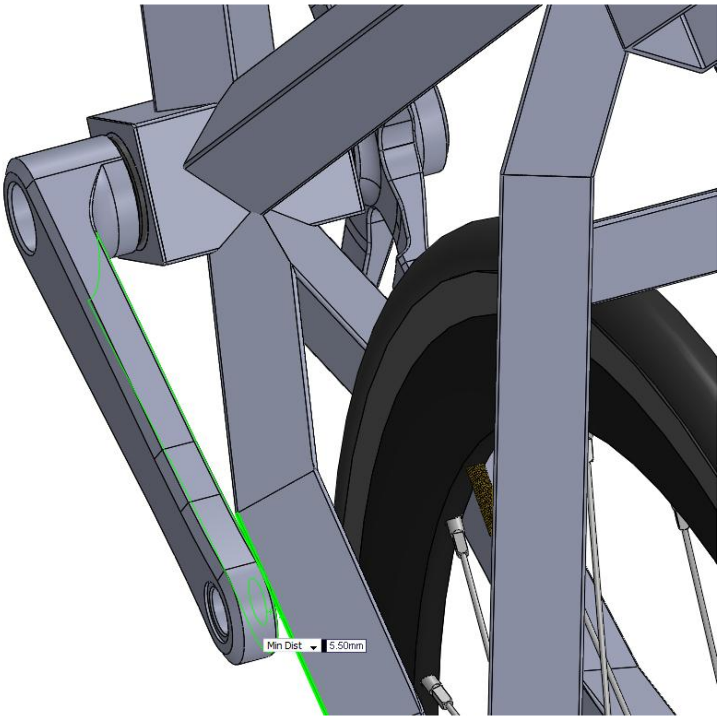

Figure 6.8. Crankarm and chainstay offset 5.5 mm

4. Sufficient space between chainring and chainstay tube for pedalling (please see fig. 6.9)

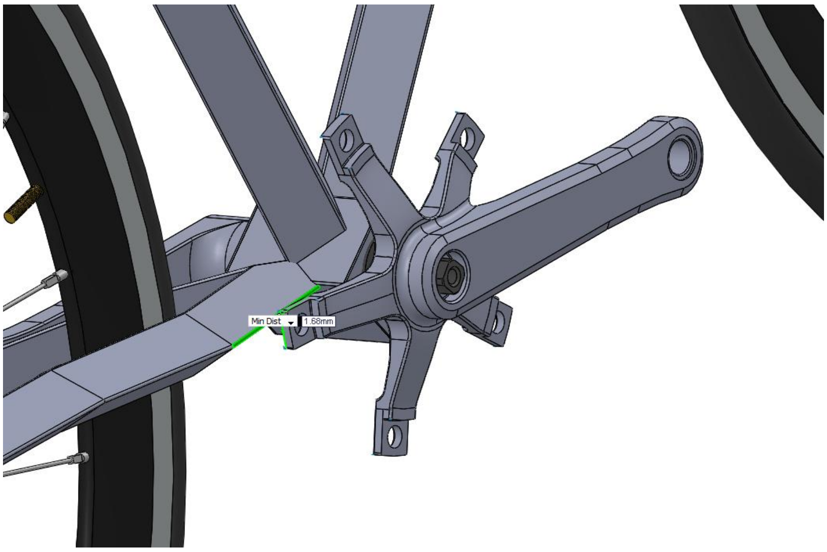

Figure 6.9. Offset between chainring and chainstay tube 1.7 mm

5. Sufficient space between chainstay tube and wheel (please see fig. 6.10)

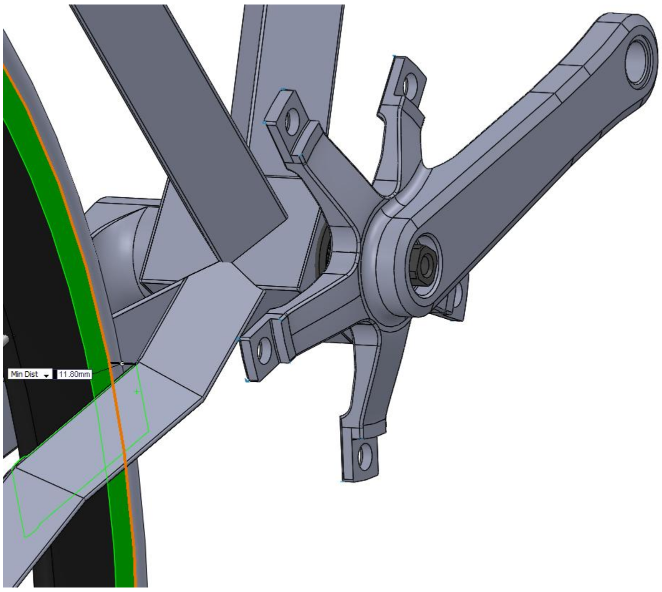

Figure 6.10. Offset between tire and chainstay tube 11.8 mm

6.3 Conclusions

Previous chapter was dedicated to mechanical engineering of proposed design concept. It was learned and improved that design stickled to using rectangular tubes is not the best solution in terms of ease of manufacturing. Otherwise, all the goals were achieved - new frameset geometry was defined while taking into account the final usage (city commuters) of the bicycle. After that bicycle frameset was modeled by using 3D modeling software called SolidWorks. All the main subsystems were successfully integrated into the rectangular tubes and finally, design bottlenecks were inspected.

7 STRENGTH ANALYSIS

Despite the introduction and development of new materials for bicycle frames, most of the bicycles produced and developed during the last century have been diamond tubular frames made of carbon steel. As most of the bicycle frames look visually the same, it might be assumed that over that long period of time, the most refined bicycle frame shape have accomplished through lengthy development. There have even written publications on intentions to improve the classical diamond shape [49]. Therefore there's no profound analysis made on looking for the most optimal "frame shape".

The challenge in current work was dictated by the designer who had rather uncommon vision to use rectangular and triangular tubes rather than common circular tubes. Technically it can be assumed right away that it isn't the best solution as the sharp corners act as stress raisers in the material. Additionally, it can be assumed that rectangular either triangular shape isn't what defines "the best" frame - achieved "light weight" at "sufficiently stiff" to support loading conditions.

For profound strength analysis, bicycle frame was analysed under different loading cases. First of all, common loading cases were studied to get an understanding if it's even wise to stick to design which is based on rectangular tubes and then to learn how frame performs under different loading circumstances. If that was achieved satisfactory, strength analysis were done according to ISO bicycle standards. There is a number of standard tests defined which a bicycle have to pass before it can be used on public roads and sold on public markets.

Strength analysis was performed by applying finite element method (FEM). This is a numerical technique for finding approximate solutions to boundary value problems for partial differential equations. It uses subdivision of a whole problem domain into simpler parts, called finite elements, and variational methods from the calculus of variations to solve the problem by minimising an associated error function. Therefore FEM encompasses methods for connecting many simple element equations over many small subdomains, named finite elements, to approximate a more complex equation over a larger domain. [50] FEM could be applied to solve different complex problems, strength analysis is one of them.

For strength analysis using FEM methodology it was used software called ANSYS Workbench 15.0 and its "Static Structural" analysis system.

7.1 Common loading cases

In order to study how heart of bicycle structure - frame - performs in real life, strength analysis was firstly done according to loading conditions researched by Mendis (1996) [51]. Mendis defined four distinct loading cases in his research - starting, speeding, rolling and breaking - based on measurements of professional Australian cyclists. Although city commuter bicycle, especially electric bicycle, which is developed within this work, will not be used for racing and never experiences such forces, Mendis input forces are still good to define "worst-case scenario" loading cases and gives a good understanding how frame will react under different circumstances and if rectangular design dictated by the designer could be accomplished. The loads applied at three application points for each case are given in table 7.1. The application points and definition of the x and y directions are shown on figure 7.1. According to Mendis definitions, point O_2 is assumed to fixed in all directions and point O_1 is allowed to move in the x direction, other directions are fixed.

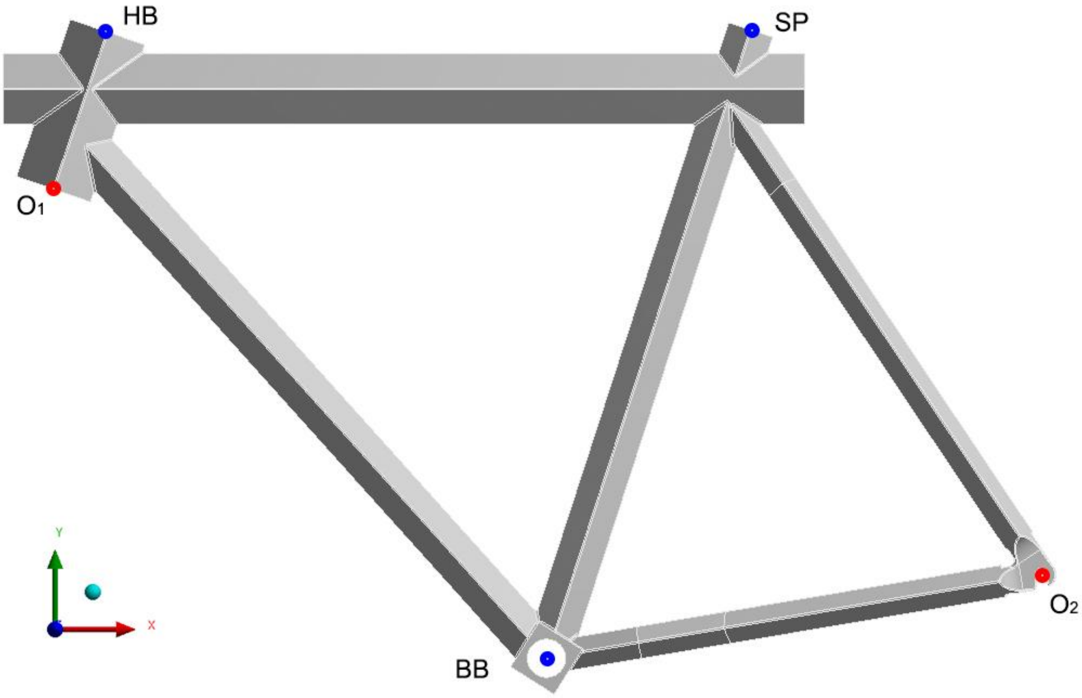

Figure 7.1. Common loading case application points (HB, SP, BB) and fixed points (O_1, O_2).

Table 7.1. Applied forces on bicycle frame according to Mendis research based on Australian professional cyclists [51].

Loading case	**Application point**	F_x N	F_y N
Starting	Handle bar [HB]	200	576
	Seat post [SP]	0	0
	Bottom bracket [BB]	4930	-2465
Speeding	Handle bar [HB]	100	54
	Seat post [SP]	20	-450
	Bottom bracket [BB]	850	-425
Rolling	Handle bar [HB]	0	-900
	Seat post [SP]	0	-900
	Bottom bracket [BB]	0	-1200
Braking	Handle bar [HB]	-800	-700
	Seat post [SP]	-300	-400
	Bottom bracket [BB]	-300	-600

As described in introductory part of strength analysis - before FEM method can be applied, the problem has to be divided into numerous small subdomains. In this case into numerous hexahedral elements [52]. Generated network of hexahedral elements which observe the shape of the model is called mesh. Accurate mesh is one of the cornerstones of realistic analysis result, besides understanding and defining correct loading conditions and defining material characteristics.

In the beginning it was used bigger elements defining mesh in order to keep calculation times lower and to convince in correct analysis results. For example initial model mesh consisted of 64,918 nodes and 36,457 elements. Refined model consisted of 239,884 nodes and 145,955 elements. This turned out to be reasonable refinement level as raising the number of elements extended the computation time but didn't change the final results. On the other hand, lowering the number of elements changed the results radically. For example a difference between first analysis and refined analysis (36,457 vs 145,955 elements) was about 80 MPa (if comparing von-Mises stress results). Please see figure 7.2 for an example of higher refinement in the critical and more complex areas.

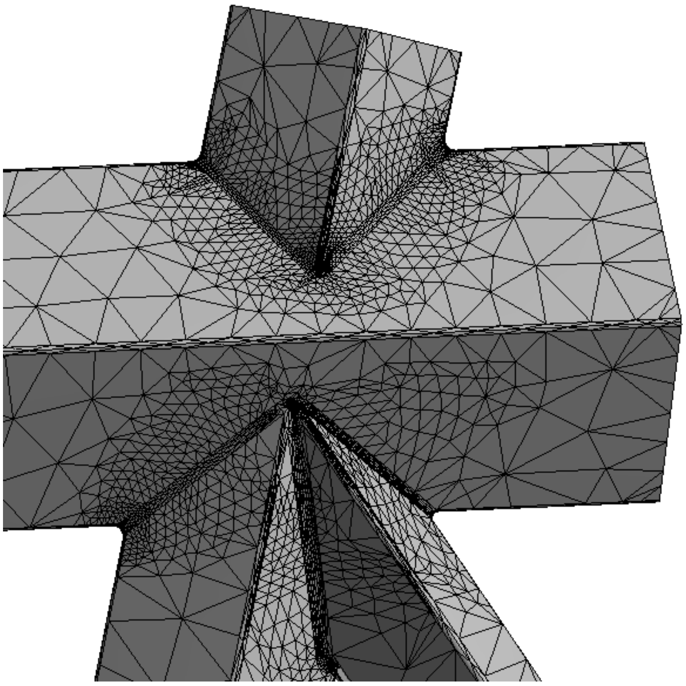

Figure 7.2. Refined mesh in most critical and geometrically complex areas. Optimal mesh in terms of calculation times and results accuracy was found to be a mesh consisting of 239,884 nodes and 145,955 elements.

Analysis results concluding test results of different loading cases is presented on figure 7.3 and in table 7.2.

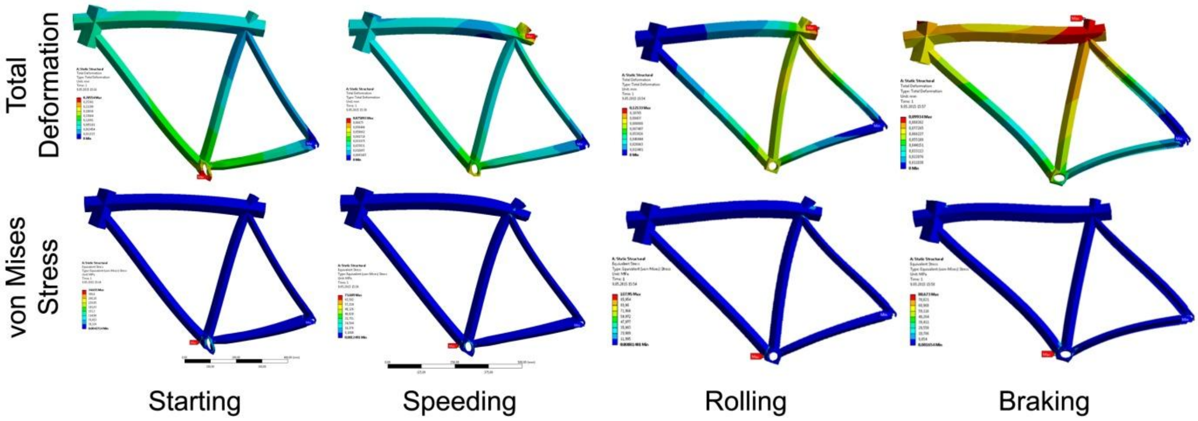

Figure 7.3. Strength analysis results under different loading conditions.

Table 7.2. Initial strength analysis test results of different loading cases.

	Loading Condition			
	Starting	**Speeding**	**Rolling**	**Braking**
Total Deformation mm	0.286	0.075	0.12	0.099
Equivalent (von-Mises) Stress MPa	289.93	73.69	107.95	88.67
Safety Factor	1.1	4.2	2.9	3.5

As it can be seen from the results - the most complex loading case as expected is when cyclist starts to pedal. According to Mendis research, in that condition, professional cyclist puts on a bottom bracket a load in total amount of 5512 N. Although everyday commuter most probably will never be able to start a sprint with such forces, given loading condition was taken under more profound investigation as reserve factor 1.1 will not be satisfactory for a product which has to have last thousands of cycles of loads.

In closer look on a analysis results of most complex "starting" loading condition it can be seen that there is stress concentrator on the area where frame's down tube and bottom bracket shell are connected. Just as it was discussed in the beginning of strength analysis chapter - sharp corners act as a stress concentrators. Please see figure 7.4 for more detailed results.

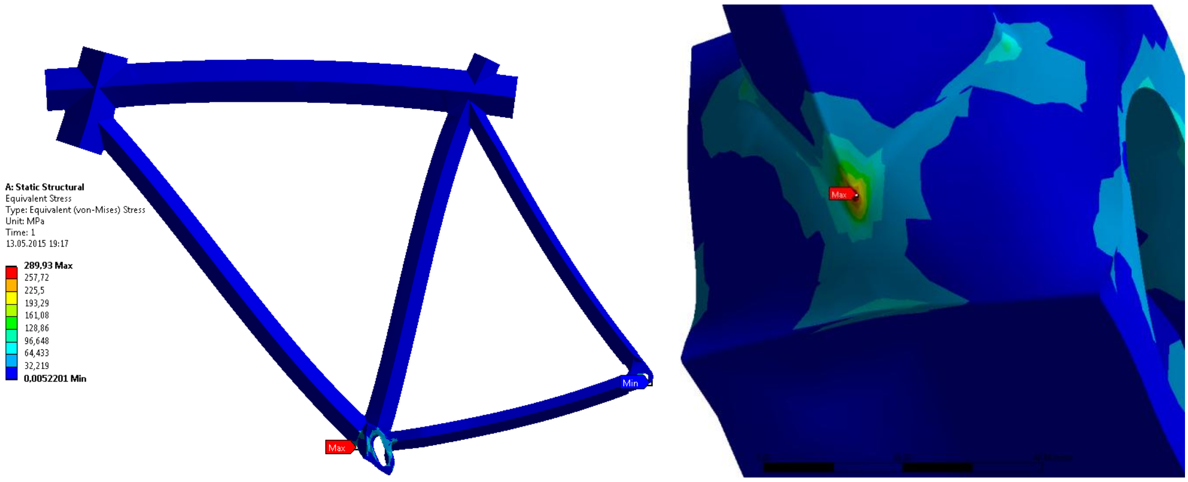

Figure 7.4. Most complex loading condition more detailed analysis. Left - overall frame analysis under loading conditions. Right - maximum stress point revealed at bottom bracket and down tube connection point.

As in most of the frame, equivalent stress is really small (≤ 50 MPa), author decided to offer a solution to overcome the stress concentrator. This was done by adding addition aluminum laser cut piece to the connection of down tube and bottom bracket shell. This additional piece reduced stresses by 96 MPa and therefore also increases reserve factor for all loading cases.

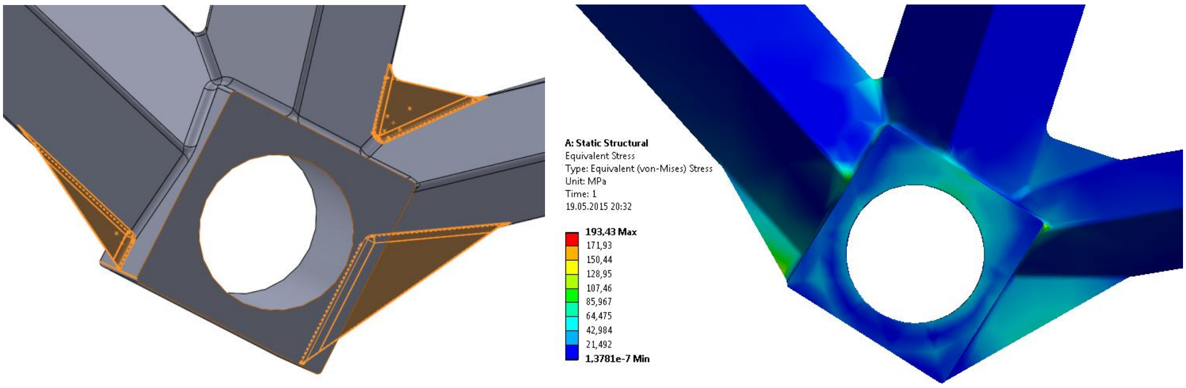

Figure 7.5. Provided solution to lower stress concentrator. Left - added aluminum laser cut piece to overcome stress concentrator. Right - analysis results after addition to the frame.

7.2 Frame analysis according to ISO 4210-6:2014

Frame - a structural heart of a bicycle - experiences various forces during its lifetime. As it is extremely complex to simulate all the unexpected and extreme loading conditions, there have been developed International Standard tests to ensure strength, safety and durability of bicycles which are manufactured worldwide. As there are standard tests which all the bicycles have to pass, it was decided to simulate all described test methods.

7.2.2 Fatigue test with horizontal forces

Very often different products may work well at the beginning but they tend to fail after of cyclic loads. This is important especially for bicycles and frames as they tend to go through several thousands of cyclic loads. Therefore ISO standard has defined fatigue test to put frames on test on most extreme cyclic loading conditions. In order to analyse fatigue propagation and stress life, ANSYS Fatigue Module was used.

First of all, loading conditions were defined. According to ISO standard [53], the frame was mounted in its normal attitude and secured at the rear dropouts so that it is not restrained in a rotary sense (i.e. preferably by the rear axle) as shown in figure x.x. Following forces were applied - horizontal forces of F_2 in a forward direction and F_3 in a rearward direction to the front fork dropouts for C_1 . Cycle amount was defined according to ISO 4210-6:2014, 4.4.2, with the front fork constrained in vertical direction but free to move in a fore/aft direction under the applied forces. Maximum test frequency wasn't increased above 10 Hz (according to ISO 4210-3:2014, 4.5)

Table 7.3. Input values for fatigue testing according to ISO 4210-3:2014 and ISO 410-6:2014

Bicycle type	Forward force, F_2 N	Rearward force, F_3 N	Test cycles, C_1	Frequency Hz
City and trekking bicycles	450	450	100 000	≤ 10

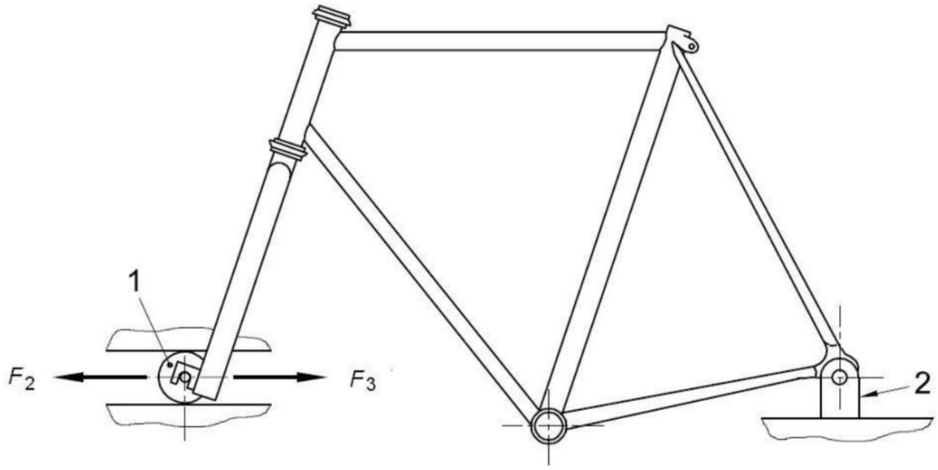

Figure 7.6. Key 1 - free-running guided roller; rigid, pivoted mounting for rear-axle attachment point [53]

After defining load conditions, there were necessary to input five common characteristics which are necessary to analysie fatigue life [54]:

- fatigue analysis type - ANSYS allows to conduct analysis in two methods: strain life and stress life. According to ANSYS [54], strain life is typically concerned with crack initiation, whereas stress life is concerned with total life. Therefore it was chosen stress life. Stress life is based on empirical S-N curves and then modified by a variety of factors. Please see aluminum alloy S-N curve below of figure 7.7.

- loading type - it was chosen constant amplitude fully reversed load according to ISO standard instructions.
- mean stress effects - as there's no experimental data available about material chosen for bicycle frame, it was analysed with different epirical options, such as Gerber, Goodman and Sodeberg which use material properties (yield stress, tensile strength) along with S-N data to account for any mean stress

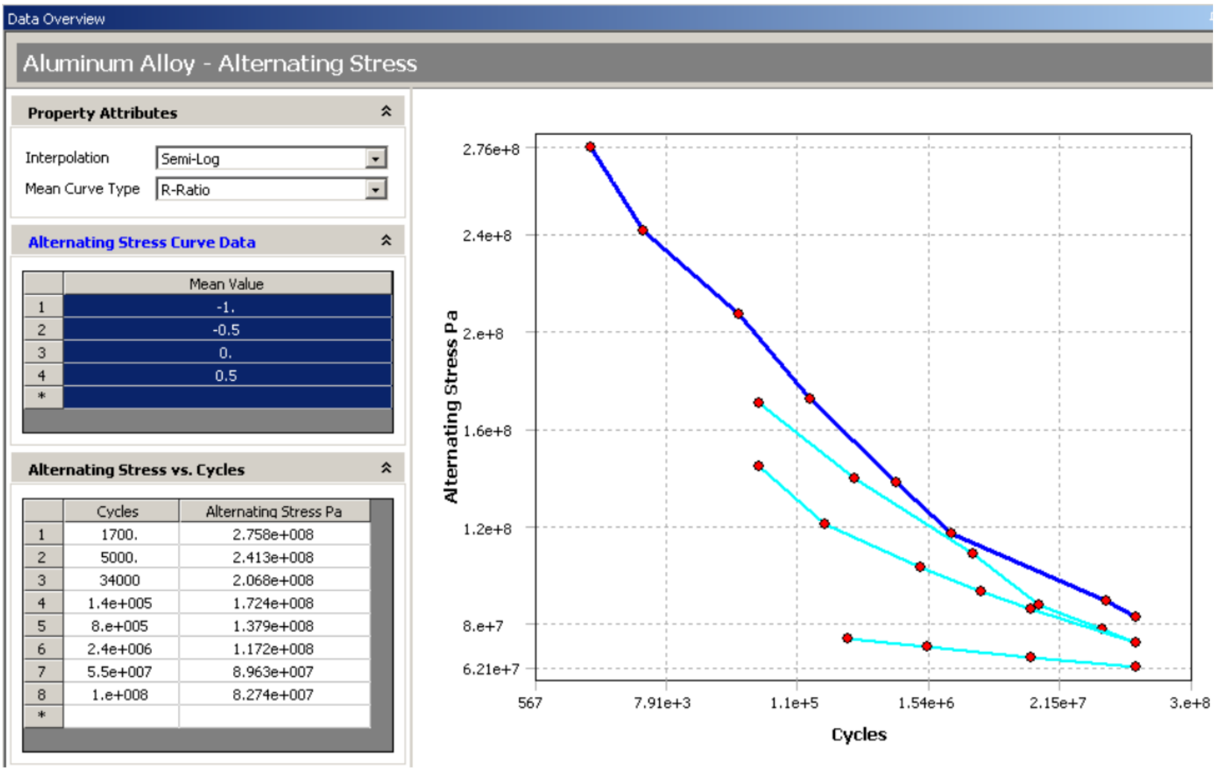

Interpolation: Semi-Log

Mean Curve Type: R-Ratio

	Mean Value
1	-1.
2	-0.5
3	0.
4	0.5
*	

	Cycles	Alternating Stress Pa
1	1700.	2.758e+008
2	5000.	2.413e+008
3	34000	2.068e+008
4	1.4e+005	1.724e+008
5	8.e+005	1.379e+008
6	2.4e+006	1.172e+008
7	5.5e+007	8.963e+007
8	1.e+008	8.274e+007
*		

Figure 7.7. Aluminum alloy mean stress S-N graph. This is a graph which shows mangitude of a cyclic stress (S) against the logarithmic scale of cycles to failure (N)

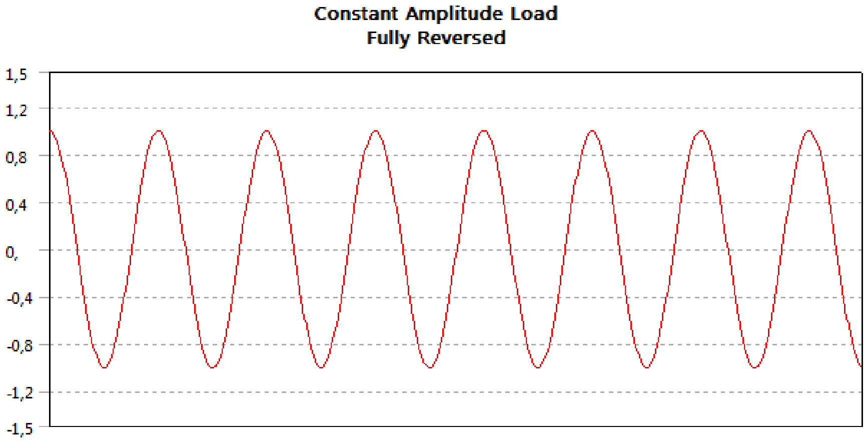

Figure 7.8. Example of constant amplitude loading. In this case it is fully reversed (+1 to -1) loading.

Initial analysis was conducted using robust dummy fork in order to study fatigue propagation profoundly in main frame structure.

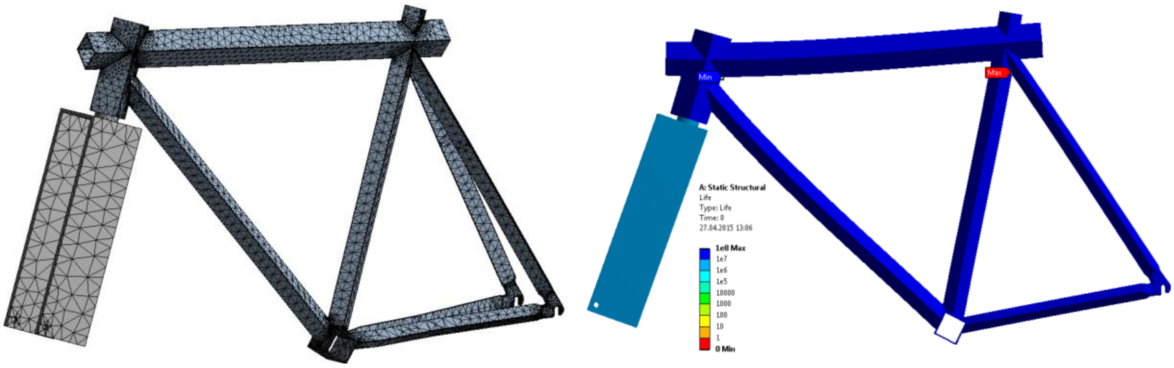

Figure 7.9. Fatigue tests conducted with dummy fork. Left - mesh, including 176212 nodes & 98037 elements, right - fatigue lifecycle results, at one stress concentrator point (at head tube and top tube connection point) is predicted to be very low (under 10 cycles).

After failing at fatigue tests, it was added additional aluminum laser cut pieces to prevent fatigue propagation points by overcoming stress concentrators. Additionally, analysis was conducted with original fork in order to achieve results as correct as possible. (Please see figure 7.9 for results.) This increased main frame structure lifetime drastically (frame main strructure is expected to last more than 300 000 cycles) and decreased stress concentration points (maximum equivalent stress 120 MPa).

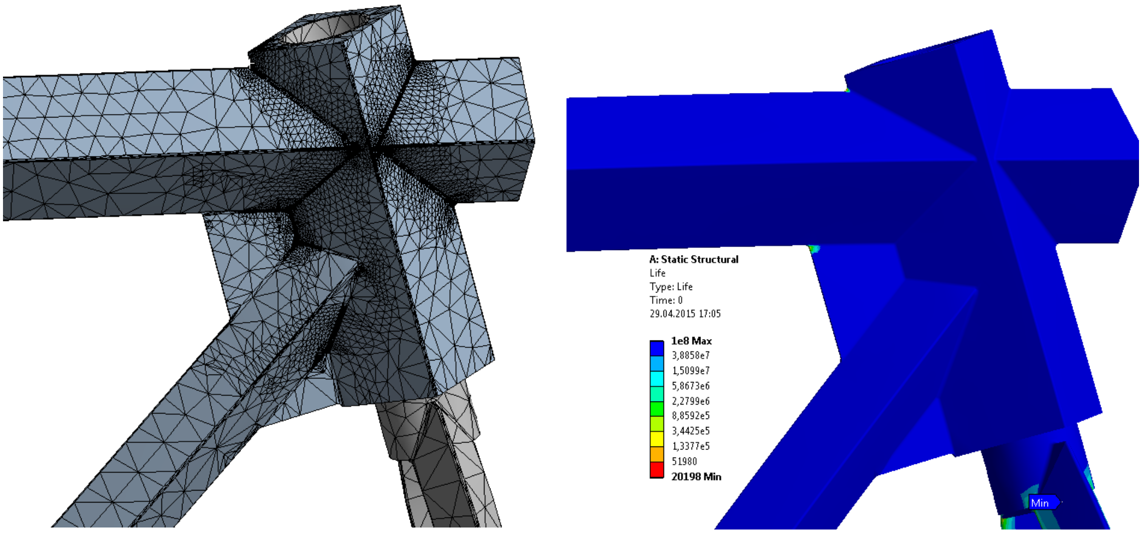

Figure 7.10. Improved frame structure to decrease von Mises stress and increase lifetime.

7.3 Conclusions

Previous chapter was dedicated to analysis of the bicycle frameset which was developed.It was assumed that using rectangular and triangular tubes is not wise option for bicycle frame as sharp corners act as stress concentrators. Therefore profound strength analysis was done in order to prove stated hypothesis and then offer results to overcome stress concentrators. Please see final frame design on figure 7.11 and final frame drawing in appendix 5.

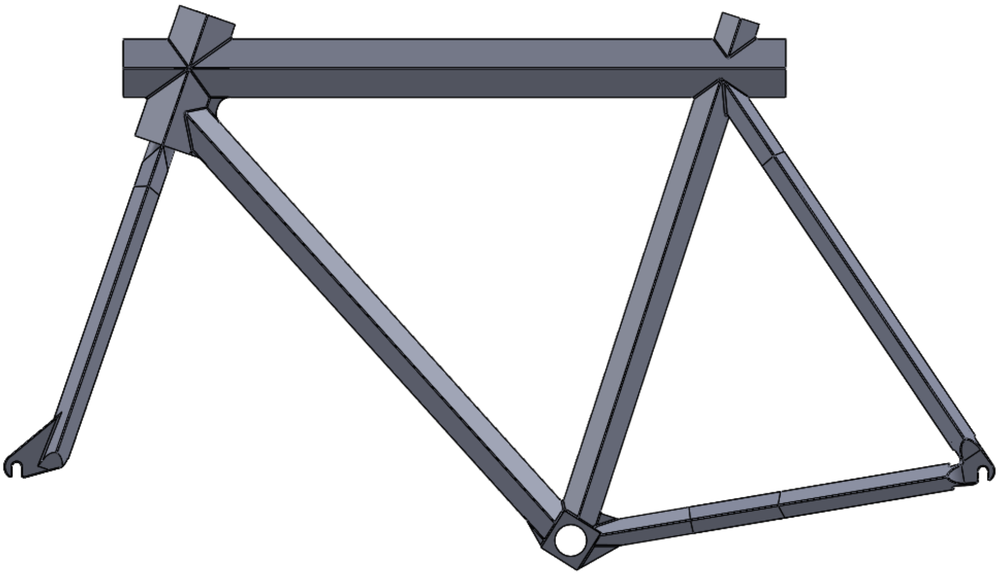

Figure 7.11. Final bicycle frameset 3D model.

After analyzing various loading conditions, (both, according to real-life loading conditions and ISO standard tests), it was made several additions to final bicycle frame. Please see final model of the bicycle frameset on figure 7.11. Final design experiences maximum of 193 MPa of von Mises stress in its main structure in the most extreme situation. This means that safety factor is rather low - 1.6. Maximum deformation is 0.21 mm. Fatigue analysis expects frameset to endure 120 000 cycles which is based on ISO 4210-3:2014 horizontal loading test. For analysis, the most optimal relation between mesh accuracy and calculation correctness was achieved with 278490 nodes and 155142 elements.

Table 7.4. Final strength analysis results.

	Max. equivalent stress (von Mises) MPa	**Max. total deformation** mm	**Safety factor**	**Mass** kg
Bicycle Frameset	193.4	0.21	1.6	2.84

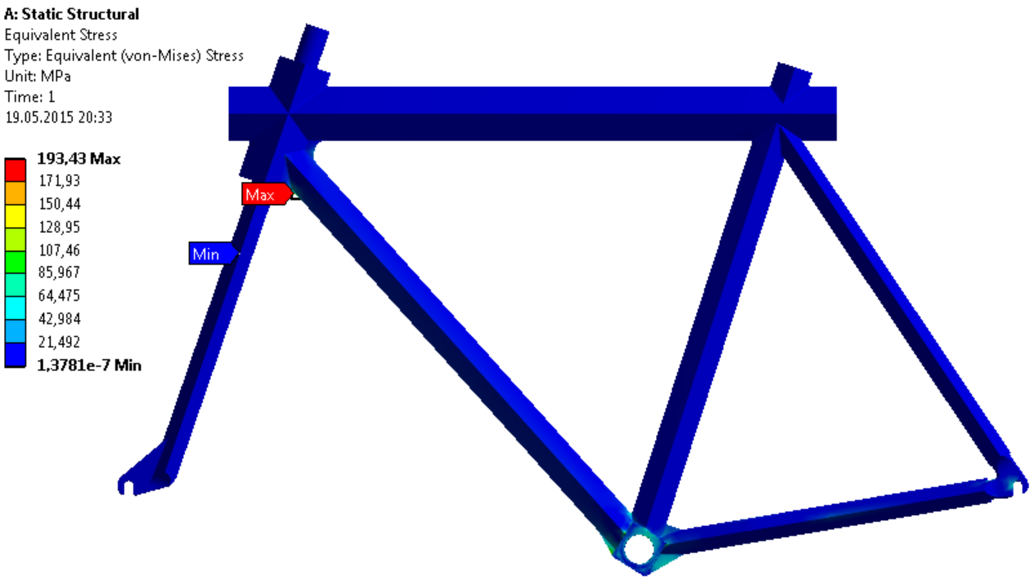

Figure 7.12. Final frameset equivalent stress analysis results for the most extreme condition (professional cyclists starts a sprint). Although additions were made to the frame, there are still stress concentrators on the sharp edges.

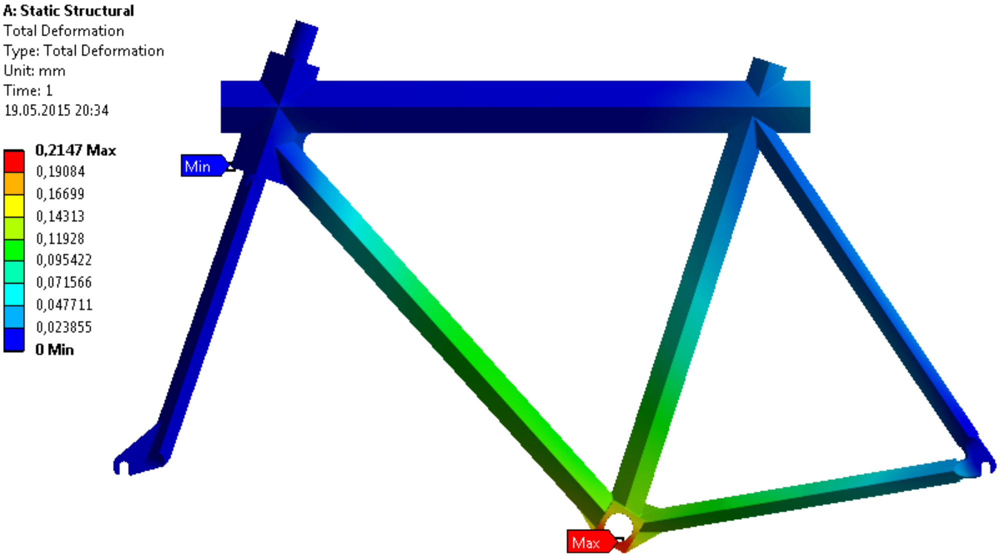

Figure 7.13. Final frameset total deformation (mm) analysis results for the most extreme condition (professional cyclists starts a sprint).

8 GENERAL CONTROL SYSTEM ARCHITECTURE

As one of the goals of current work was to develop an overall concept for electric bicycle, also an system architecture for electric bicycle was developed. Component selection for different subsystems is not profoundly analyzed as this is not the focus of current work. Following chapter will describe subsystems which are not off the shelf products. Please find full system architecture diagram in appendix 6.

8.1 Battery Management System (BMS)

Battery management system (BMS) is developed to achieve following goals:

- over voltage protection;
- under voltage protection;
- programmable protection features (voltage, current, temperature, components);
- internal cell balancing;
- accurate state of charge and battery health calculation.

Battery management system has two main components which dictate its design. Firstly and most important - battery monitoring chip which is responsible for under and over voltage protection, monitoring and balancing internal battery cells. For this, it was chosen Texas Instruments BQ76930 which is suitable for current battery pack. Secondly, fuel gauge chip, Texas Instrument BQ78350 provides accurate fuel gauging algorithm technology and state of health monitor calculations. Fuel gauging technology has the ability to very precisely measure battery pack's state of charge by using adaptive algorithm based on specific battery pack's chemistry permits, battery cell impedance, voltage, temperature and current.

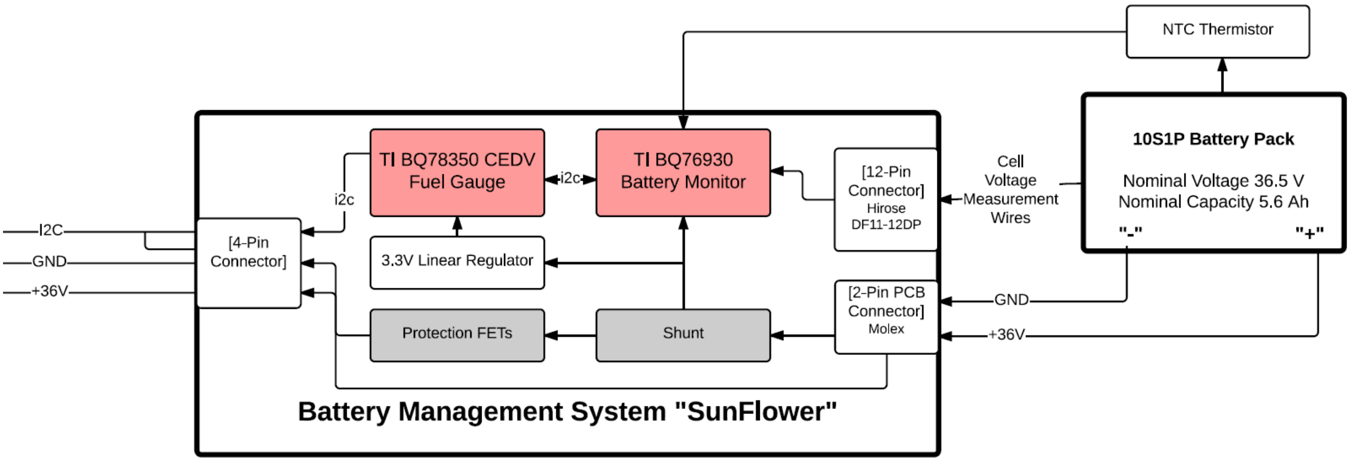

Figure 8.1. Battery management system & battery pack simplified diagram.

8.2 Central Control Unit

Central control unit is developed for following features:

- ability to receive information from different counterparts (Smartphone, web server, motor controller, GPS, accelerometer, sensors, buttons on the handlebar etc), based on gathered information or commands to process the information and therefore control the whole vehicle;
- ability to gather data from vehicle's communication interface (from motor controller, vehicle's sensors and BMS);
- ability to save gathered data on flash memory for further analysis;
- ability to transfer data over Bluetooth to Smartphone application and/or web server over GSM connectivity for further analysis;
- ability to track the vehicle over GPS connectivity to avoid thefts;
- ability to receive commands over wireless connection, either over Bluetooth or GSM (e.g. to lock vehicle or change assist level);
- ability to control vehicle I/O switch, vehicle lights etc.

All the previously described functions allow different benefits:

- Smartphone application as novel human-to-machine interface;
- anti-theft feature by incorporating GPS and GSM connectivity;
- vehicle, user and vehicle's manufacturer interaction over connectivity platform;

- remote warranty management;
- monitor and analyze vehicle's usage and performance.

Therefore, central control unit schematics is compiled in order to achieve all the features listed above. For that, Nordic Semiconductor's nRF51822 was chosen as central unit of the system. This is system on a chip (SoC) which is built around powerful 32-bit ARM Cortex, provides Bluetooth Smart connectivity and multiple communication interfaces. nRF communicates data between SIMCom A-GPS module, SIMCom SIM800H GSM/GPRS module, accelerometer, Bluetooth antenna and flash memory. As one of the design goals was to develop central control unit as universal platform (also suitable for other vehicles) there's also STM42F04C6 microcontroller unit (MCU) which allows to gather information also over CANBus and RS485 interface.

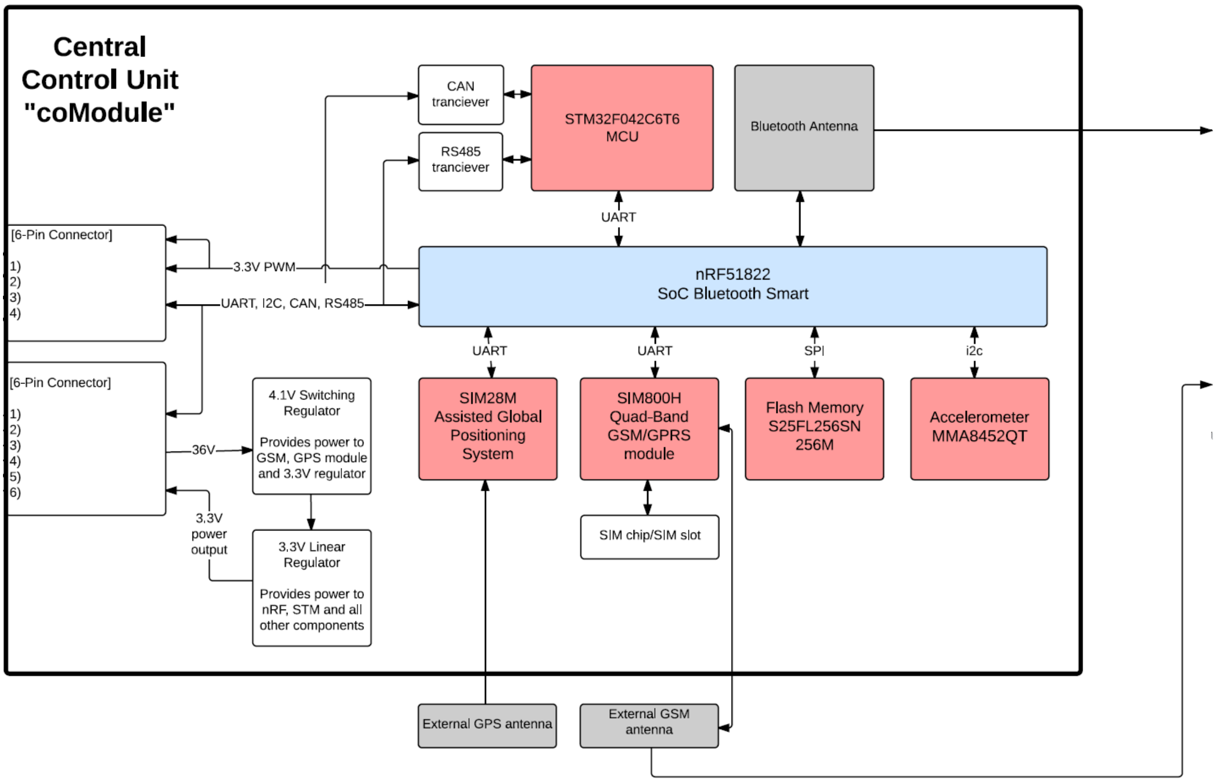

Figure 8.2. Central control unit diagram

SUMMARY

Given thesis ultimate goal was to develop an electric commuter bicycle concept which would have unique value proposition to its customers by providing novel features. Focus of the work was on mechanical engineering of the proposed bicycle concept - defining reasonable geometry, modeling it, (strength) analysis according to international standards and then think through engineering and manufacturing bottlenecks of the structural heart of the bicycle - a frame. Additionally, second goal was to develop general control system architecture which incorporate all the beyond state of the art features.

Work started firstly by discussing the author's motivation behind the topic and then continued with thorough problem analysis. It was found out that bicycles are playing major role in overcoming the urbanisation challenges - overpopulated cities and increasing air pollution and that electric bikes encapsulate perfectly the transport and mobility needs of 21st century lifestyle. Electric motors provide faster and sweat-free rides, at the same time still being healthy and nimble for short inner city trips, environmentally friendly and a lot cheaper than to get around than by car. Hence, profound analysis, patent research and market research of the electric bicycles available on the market were made. Based on that knowledge it was stated a narrow problem and offered a new concept for a new type of electric bicycle. Main goals included attractive design, affordable price, low weight and anti-theft features.

After concluding problem analysis results, it was made concrete problem statement and designer's vision of the bike was briefly described. . After that all the design constraints were chosen which dictate the final design of the frame. In order to keep the initial manufacturing costs low, and stick to designer vision - it was decided to produce the frame out of 6061-T6 aluminum standard tubes which would be laser cut, then TIG welded and then anodized for higher wear resistance. Battery pack was chosen to assemble of Boston Power Swing 5300 battery cells in configuration of 10 cells in series and 1 in parallel. It was done very profound motor analysis which proposed to use 250W GoSwissDrive drivetrain which has torque sensor and motor controller integrated.

After selecting all the components - bicycle frameset was developed. Main challenges were in integrating all the standard bicycle parts, battery pack and electronics into the rectangular frame tubes and also overcoming the clearance issues between subcomponents while using

triangular tubes. It was proved that rectangular and triangular tubes chosen by the designer, wasn't wise option in terms of ease of manufacturing. It requires different additional parts to integrate standard bicycle parts like bottom bracket and headset.

Irrational decision of designer concept to use rectangular tubes was also improved by strength analysis - it was found out that sharp edges act as stress concentrators. It was also offered a solution to that but this makes the manufacturing more complicated. Otherwise, strength analysis was conducted through various loading conditions and also standard bicycle tests defined in ISO standards were compiled. After couple of design iterations, final design has maximum of 193 MPa of von Mises stress in its main structure in the most extreme situation. Frameset passed also ISO fatigue tests. After that, final bicycle frameset drawing, presenting main dimensions was compiled.

Ultimately, electric control system architecture was developed which incorporates various novel features like Bluetooth connectivity to Smartphone, GSM connectivity to web server, GPS connectivity to track the bicycle if its stolen etc. Also state of the art battery management system electronics working diagram was compiled.

It can be concluded that author recommends not to use rectangular tubes for the final concept which were proposed by the designer of the bicycle. Otherwise, all the goals were achieved which were stated in the beginning of the work - novel electric bicycle concept was developed, including thorough electrical component selection, profound modeling and strength analysis.

KOKKUVÕTE

Antud töö eesmärgiks seati ainulaadse elektrilise jalgratta kontseptsiooni loomine, mis suudaks lõppkliendile pakkuda kõrgemat lisandväärtust ja seeläbi erineks teistel turul pakutavatest elektriratastest. Töö keskendus jalgratta mehaanika loomisele - anatoomiselt ja sihtotstarbest lähtuvalt õige geomeetria loomine, selle modellerimsele, tugevusanalüüsidele ja töö vastavusele ISO standarditele. Teiseks suureks eesmärgiks seati üldise elektriratta kontrollsüsteemi loomine ja peamiste komponentide valik.

Töö alguses kirjeldati autori motivatsiooni teema valimisel. Sellele järgnes põhjalik probleemi analüüs võttes arvesse patente antud valdkonnas, tänapäevaste tehnoloogiate kättesaadavust antud valdkonnas ja turuanalüüsi mõistmaks võimalike konkurentide eeliseid ja puudusi. Seejärel püsitati kitsas probleem ja konkreetsed eesmärgid milline ratas erineks teistest ja looks uut lisandväärtust. Ühtlasi lõi meeskonnaväline disainer uue ratta kontseptsiooni mille raami disain rajanes kandilistel torudel.

Seejärel alustati projekteerimist piiravate tegurite defineerimisega ja algkomponentide valikuga, mis määravad piirangud raami disainile. Raami materjaliks valiti EN-EW-6061-T6 standardsed alumiiniumprofiilid. Kandiline profiil valiti vastavalt disaineri nägemusele. Tootmismetoodika näeb ette torude laserlõikust, seejärel TIG keevitamist ja anodeerimist lõppviimistlusena. Mootoriks valiti 250W GoSwissDrive tagumise rummu mootor. 36 V nominaalpingega akupakk otsustati koostada Bostn Power Swing 5300 elementidest.

Projekteerimist alustati raami geomeetria defineerimisega võttes arvesse jalgratta eeldatavat kasutusotstarvet ja sõitja anatoomilisi mõõtmeid. Arutleti erinevate mõõtmete ja nende mõju üle jalgratta juhitavusele. Peamised väljakutsed projekteerimisel tulenesid kandilise toru kasutuselevõtust - nt keskjooksu ja kaelakausside integreerimisel. Leiti, et selline algmaterjali valik muudab tootmisprotsessi keerukamaks, sest standardetailide integreerimiseks ja raami paigutamiseks on tarvis teha lisatööd.

Seejärel viidi läbi põhjalik tugevusanalüüs. Tugevusanalüüs baseerus erinevatel rajatingimustel, mille koormamisskeemid baseerusid teadustööde tulemustel. Ühtlasi analüüsiti ka prao tekkimisvõimalusi vastavalt ISO standardkatsetele. Peale mitmeid

iteratsioone ning viimaseid muudatusi raami disainis, valmis lõplik mudel. Kõige karmimates rajatingimustel esineb materjalis maksimaalne pinge 193 MPa.

Töö viimases osas loodi elektrijalgratta kontrollsüsteem kuhu olid integreeritud mitmed uuenduslikud komponendid - sh Bluetooth ühenduvus nutitelefoni jaoks, GSM võrguga ühenduvus veebiserveri tarvis, GPS ühendatavus selleks, et hoida ära vargusi. Ühtlasi akude kontrollelektroonika tarvis loodi kirjeldav skeem.

Kokkuvõtlikult võib öelda, et töö autor kandilisi standardprofiile jalgrattaraami loomisele kasutada ei soovita. Sellest hoolimata kõik teised töö eesmärgid said täidetud - uuenduslik elektrilise jalgratta kontseptsioon ning tehniline arendustö kirjeldus selle loomiseks. Insenertöö tulemusena valmis raami geomeetria, raami joonised ja üldise juhtsüsteemi kirjeldus.

REFERENCES

1. "Light Electric Vehicles 2011-2021" [WWW] http://www.idtechex.com/research/reports/light-electric-vehicles-2011-2021-000274.asp (Retrieved 01-04.2015).
2. "World's population increasingly urban with more than half living in urban areas" United Nations [WWW] http://www.un.org/en/development/desa/news/population/world-urbanization-prospects-2014.html (Retrieved 03.04.2015)
3. "7 Million Premature deaths annually linked to air pollution" WHO [WWW] http://www.who.int/mediacentre/news/releases/2014/air-pollution/en/ (Retrieved 03.04.2015)
4. "The Future of Biking, and How Good Design Can Help" Adele Peters (03.12.2012) [WWW] http://magazine.good.is/articles/the-future-of-biking-and-how-good-design-can-help (Retrieved 03.04.2015)
5. "Will technology help us escape urban commuting hell?" Jane Wakefield (23.02.2015) [WWW] http://www.bbc.com/news/business-30981226 (Retrieved 03.04.2015)
6. "Copenhageners love their bikes" [WWW] http://denmark.dk/en/green-living/bicycle-culture/copenhageners-love-their-bikes/ (Retrieved 03.04.2015)
7. "Cycling sells: Three of EU's biggest markets see substantial increase in bike sales in 2014" European Cyclists' Federation [WWW] http://www.ecf.com/news/cycling-sells-three-of-eus-biggest-markets-see-substantial-increase-in-bike-sales-in-2014/ (Retrieved 04.04.2015)
8. "Utility Bicycle" Wikipedia [WWW] http://en.wikipedia.org/wiki/Utility_bicycle (Retrieved 04.04.2015)
9. "History of the Bicycle" Wikipedia [WWW] http://en.wikipedia.org/wiki/History_of_the_bicycle (Retrieved 04.04.2015)
10. "Improvement in velocipedes" P. Lallement, US Patent 59915A (20.11-1886) [WWW] http://www.google.com/patents/US59915 (Retrieved 15.04.2015)
11. "A Short History of the Bicycle" Ayleen Crotty (13.03.2012) [WWW] http://orbike.com/a-short-history-of-the-bicycle/ (Retrieved 15.04.2015)

12. The Inventor of the Bicycle [WWW] http://patentpending.blogs.com/patent_pending_blog/2005/02/the_inventor_of.html (Retrieved 15.04.2015)
13. Photos tagged with bicycle [WWW] http://www.flickriver.com/photos/cycleczar/tags/bicycle/ (Retrieved 15.04.2015)
14. Mountain Bike [WWW] http://en.wikipedia.org/wiki/Mountain_bike (Retrieved 15.04.2015)
15. Peugeot B1K Concept Bike Sketches [WWW] http://talent.adweek.com/gallery/PEUGEOT-B1K-CONCEPT-BIKE-SKETCHES/2997453 (Retrieved 15.04.2015)
16. Electric bicycle [WWW] http://en.wikipedia.org/wiki/Electric_bicycle (Retrieved 15.04.2015)
17. "Cheap Electric Bikes Guide" Pete Prebus [WWW] http://electricbikereport.com/cheap-electric-bikes/ (Retrieved 15.04.2015)
18. Greyp Bikes [WWW] http://www.greyp-bikes.com/ (Retrieved 15.04.2015)
19. "Electric Bicycles" Navigant Research [WWW] https://www.navigantresearch.com/research/electric-bicycles (Retrieved 15.04.2015)
20. "E-Bikes: Impact on Physical Activity and Health" David R. Bassett, Jr [WWW] http://tesp.engr.utk.edu/pdf/leverpdf/Bassett_Health.pdf (Retrieved 15.04.2015)
21. "Electric Bicycles: Public Perceptions & Policy" by Ken Mcleod, League of American Bicyclists [WWW] http://www.bikeleague.org/sites/default/files/E_bikes_mini_report.pdf (Retrieved 15.04.2015)
22. "Give Cycling a Push" Presto Cycling Policy Guide [WWW] http://ec.europa.eu/energy/intelligent/projects/sites/iee-projects/files/projects/documents/presto_policy_guide_electric_bicycles_en.pdf (Retrieved 16.04.2015)
23. "E-Bike Sales Are Surging In Europe" Danny Hakim (18.09.2014) [WWW] http://www.nytimes.com/2014/08/19/business/e-bike-sales-are-surging-in-europe.html?_r=1 (Retrieved 16.04.2015)
24. "Electric Bike History, patents from 1800s" [WWW] https://www.electricbike.com/e-bike-patents-from-the-1800s/ (Retrieved 16.04.2015)

25. "Electrical Bicycle" Ogden Bolton (31.12.1895) US Patent 552271A [WWW] http://www.google.com/patents/US552271 (Retrieved 17.04.2015)
26. "Electric Bicycle" Iiosea W. Libbet (28.12.1897) US Patent 596272A [WWW] http://www.google.com/patents/US596272 (Retrieved 17.04.2015)
27. "Velocipede" Gordon John Scott (8.02.1898) US Patent 598819A [WWW] https://www.google.com/patents/US598819 (Retrieved 17.04.2015)
28. "Schnepf" John Schnepf (13.06.1899) US Patent 627066A [WWW] http://www.google.com/patents/US627066 (Retrieved 17.04.2015)
29. "Electric Bicyle" Albert Haensel (01.02.1899) US Patent 656323A [WWW] http://www.google.com/patents/US656323 (Retrieved 17.04.2015)
30. "Electric Bicycle" Thomas M. Mcdonald (12.05.1938) US Patent 2179418A [WWW] https://www.google.com/patents/US2179418 (Retrieved 17.04.2015)
31. "Electric Bicycle" Argyris Stefanos (20.02.1946) US Patent 2457430A [WWW] http://www.google.com/patents/US2457430 (Retrieved 17.04.2015)
32. "Electrically Powered Cycle" Augustus B Kinzel (05.03.1974) US Patent 3884317A [WWW] https://www.google.com/patents/US3884317 (Retrieved 17.04.2015)
33. "Motor and pedal propeller cycle" Peter Watson Leighton, Charles Patrick, Duncan Davidson (21.06.1977) US Patent 4030562A [WWW] http://www.google.com/patents/US4030562 (Retrieved 17.04.2015)
34. "Motor and pedal driven bicycles" Lawrence A. Rudwick (28.07.1981) US Patent 4280581A [WWW] http://www.google.com.au/patents/US4280581 (Retrieved 17.04.2015)
35. "Back to the Future? Highlights and Findings from 30 years Pedelec History" [WWW] http://blog.formf.de/2012/06/back-to-the-future-highlights-and-findings-from-30-years-pedelec-history/ (Retrieved 18.04.2015)
36. "Friction Drives; Ultra-light and Surprisingly Powerful" [WWW] https://www.electricbike.com/friction-drive/ (Retrieved 18.04.2015)
37. "Diese Elektrofahrräder sind lebensgefährlich" Bild [WWW] http://www.bild.de/auto/auto-news/fahrrad/adac-stiftung-warentest-test-elektrofahrrad-pedelec-lebensgefahr-bruch-rahmen-lenker-30603054.bild.html (Retrieved 18.04.2015)

38. "Finally, an e-bike that actually looks as good as it rides" Rene Chun, Wired (15.05.2014) [WWW] http://www.wired.com/2014/05/vanmoof-10-electrified/ (Retrieved 18.04.2015)
39. "Material Property Data." MatWeb [WWW] http://www.matweb.com/ (Retrieved 24.04.2015)
40. "VREDESTEIN Bicyle Tires" [WWW] http://www.vredesteinusa.com/index.html?lang=en-us&target=d16.html (Retrieved 26.04.2015)
41. "27.5 vs. 29: Determining what wheel size is best for you" [WWW] http://www.competitivecyclist.com/learn/27-5-vs-29 (Retrieved 26.04.2015)
42. "Bottom Bracket" Wikipedia [WWW] http://en.wikipedia.org/wiki/Bottom_bracket (Retrieved 27.04.2015)
43. "Crankset" Wikipedia [WWW] http://en.wikipedia.org/wiki/Crankset (Retrieved 27.04.2015)
44. http://www.retrobike.co.uk/forum/viewtopic.php?t=204260 [WWW] (Retrieved 27.04)
45. "Headset (bicycle part)" Wikipedia [WWW] http://en.wikipedia.org/wiki/Headset_%28bicycle_part%29 (Retrieved 27.04.2015)
46. "Headset Standards" Park Tool [WWW] http://www.parktool.com/blog/repair-help/headset-standards (Retrieved 27.04.2015)
47. http://forums.mtbr.com/downhill-freeride/integrated-headset-563124.html [WWW] (Retrieved 27.04.2015)
48. Richard P. Talbot (1984) "Designing and Building Your Own Frameset" Retrieved 17.05.2015 from URL http://bhovey.com/Masi/Scans/Talbot/pages/000d.htm
49. Apichart Suppapitnarm (2001) "Multiobjective Optimisation of Bicycle Frames Using Simulated Annealing" Publication, Retrieved 17.05.2015 from URL http://aut.researchgateway.ac.nz/handle/10292/7094
50. "Finite Element Method" Wikipedia [WWW] http://en.wikipedia.org/wiki/Finite_element_method (Retrieved 03.05.2015)
51. Mendis, C (1996), "Optmisation of a Carbon Composite Bicycle Frame" BEng thesis, Department of Aeronautical Engineering, University of Sidney

52. Wang, E "Back to Elements - Thetrahedra vs Hexahedra" [WWW] http://ainastran.org/staticassets/ANSYS/staticassets/resourcelibrary/confpaper/2004-Int-ANSYS-Conf-9.PDF (Retrieved 15.06.2015)
53. "Cycles - Safety requierements for bicycles - Part 6: Frame and fork test methods" ISO 4210-6:2014, corrected version 2014-11-01
54. Browell, R (2006) "Calculating and Displaying Fatigue Results" [WWW] http://www.ansys.com/staticassets/ansys/staticassets/resourcelibrary/whitepaper/fatigue.pdf (Retrieved 16.05.2015)

Appendix 1. Electric two-wheelers developed in Estonia

Foldable electric scooter

Unattractive design
Unique folding feature
Uncomfortoble seating position
No smartphone connectivity
1999 € (will be available in the end 2015)
Designed for short-distance mid-town commuters

25 km/h
13.5 kg
250W
36V LiFePO4
20 km

Electric Mini-Sportbike

Original design
Rather small - uncomfortable for adults?
Provides interesting features,
eg. smartphone connectivity
3499 € (available summer 2015)
Designed for young urban commuters

45 km/h
76 kg
2 kW
48V LiFePO4
60 km

Electric Chopper

Unique design
Uncomfortable for everyday commute
No smartphone connectivity
3999 € (available in July 2015)
Engineeringwise very simple
Designed to show off

35 km/h
65 kg
1 kW
48V LiFePO4, 20 Ah
55 km

Electric Cruiser Bicycle

Outstanding desgin
Uncomfortable for everyday commute
Very uncomfortable seating position
No smartphone connectivity
Price ~4000 €, built on request
Designed to show off

Unkown specs

Custom Electric Bicycle Garage Projects

Unknown specs & features, all look very bulky, heavy battery packs and motors

Appendix 2. SAPA aluminum profiles mechanical properties

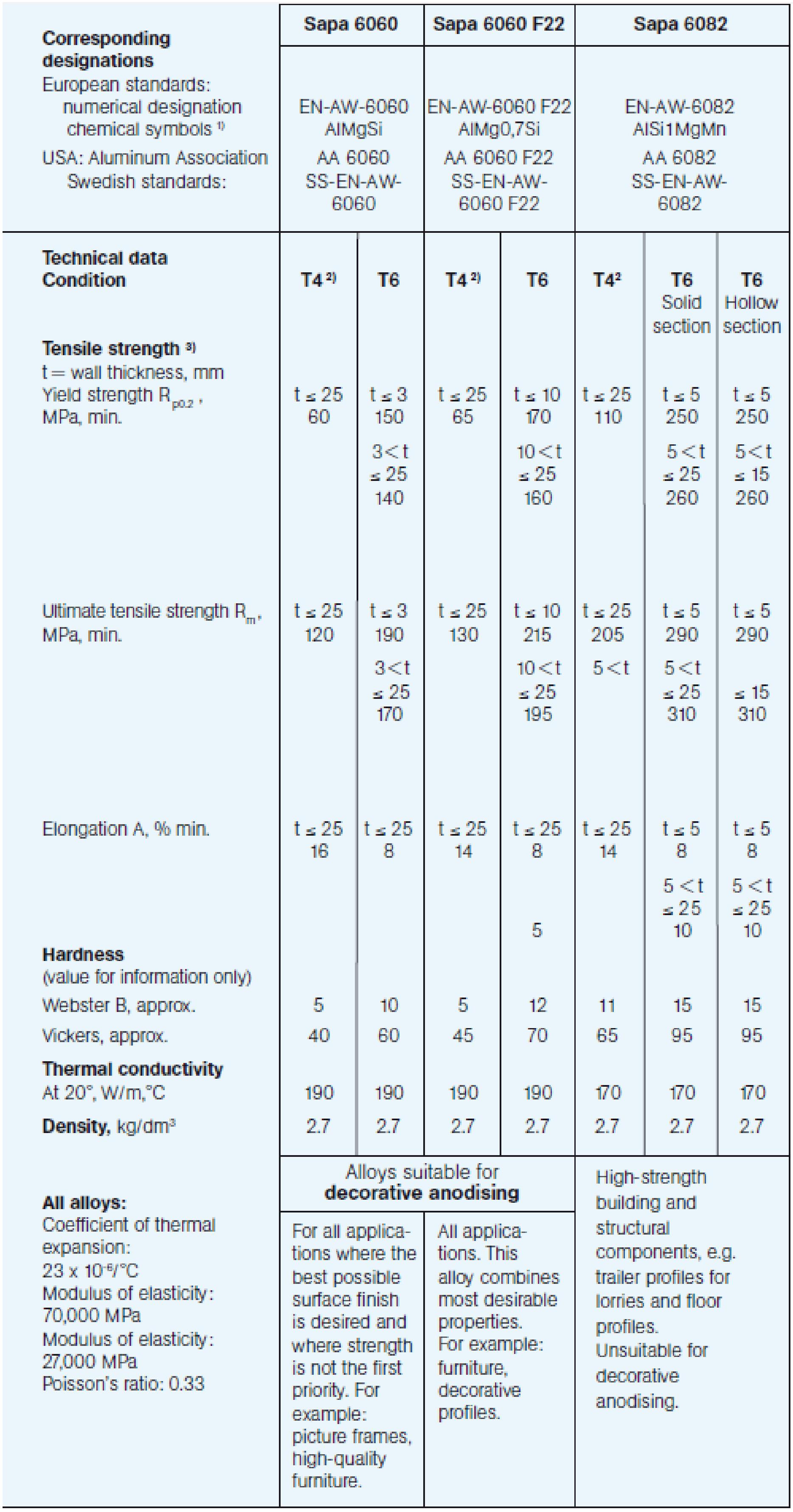

Corresponding designations	**Sapa 6060**		**Sapa 6060 F22**		**Sapa 6082**		
European standards: numerical designation	EN-AW-6060		EN-AW-6060 F22		EN-AW-6082		
chemical symbols 1)	AlMgSi		AlMg0,7Si		AlSi1MgMn		
USA: Aluminum Association	AA 6060		AA 6060 F22		AA 6082		
Swedish standards:	SS-EN-AW-6060		SS-EN-AW-6060 F22		SS-EN-AW-6082		
Technical data Condition	**T4 2)**	**T6**	**T4 2)**	**T6**	**T4**[2]	**T6** Solid section	**T6** Hollow section
Tensile strength 3) t = wall thickness, mm Yield strength $R_{p0.2}$, MPa, min.	t ≤ 25 60	t ≤ 3 150 3 < t ≤ 25 140	t ≤ 25 65	t ≤ 10 170 10 < t ≤ 25 160	t ≤ 25 110	t ≤ 5 250 5 < t ≤ 25 260	t ≤ 5 250 5 < t ≤ 15 260
Ultimate tensile strength R_m, MPa, min.	t ≤ 25 120	t ≤ 3 190 3 < t ≤ 25 170	t ≤ 25 130	t ≤ 10 215 10 < t ≤ 25 195	t ≤ 25 205 5 < t	t ≤ 5 290 5 < t ≤ 25 310	t ≤ 5 290 ≤ 15 310
Elongation A, % min.	t ≤ 25 16	t ≤ 25 8	t ≤ 25 14	t ≤ 25 8 5	t ≤ 25 14	t ≤ 5 8 5 < t ≤ 25 10	t ≤ 5 8 5 < t ≤ 25 10
Hardness (value for information only)							
Webster B, approx.	5	10	5	12	11	15	15
Vickers, approx.	40	60	45	70	65	95	95
Thermal conductivity At 20°, W/m,°C	190	190	190	190	170	170	170
Density, kg/dm³	2.7	2.7	2.7	2.7	2.7	2.7	2.7
All alloys: Coefficient of thermal expansion: 23 x 10⁻⁶/°C Modulus of elasticity: 70,000 MPa Modulus of elasticity: 27,000 MPa Poisson's ratio: 0.33	Alloys suitable for **decorative anodising**				High-strength building and structural components, e.g. trailer profiles for lorries and floor profiles. Unsuitable for decorative anodising.		
	For all applications where the best possible surface finish is desired and where strength is not the first priority. For example: picture frames, high-quality furniture.		All applications. This alloy combines most desirable properties. For example: furniture, decorative profiles.				

Appendix 3. Boston Power Swing5300 Data Sheet

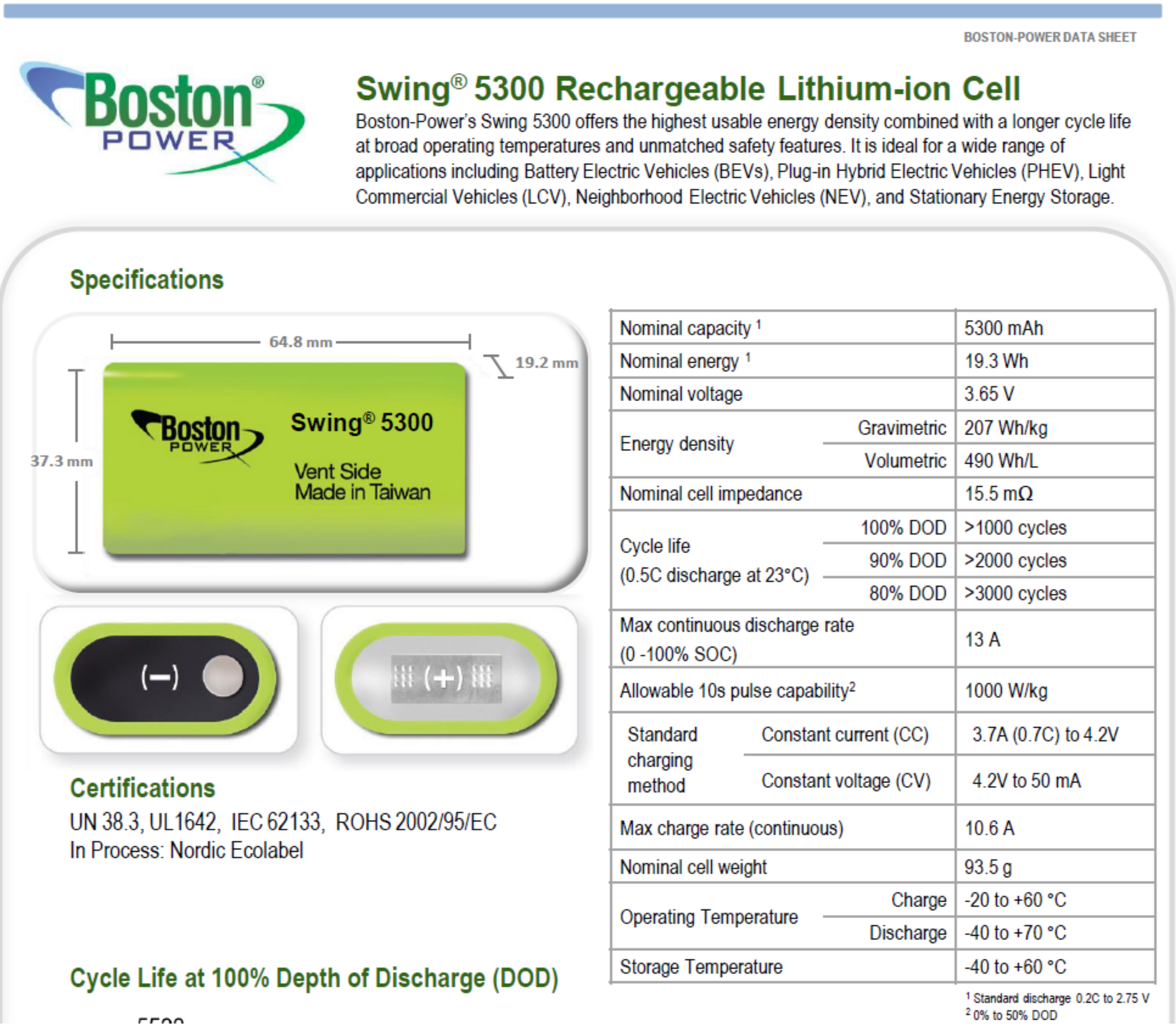

BOSTON-POWER DATA SHEET

Swing® 5300 Rechargeable Lithium-ion Cell

Boston-Power's Swing 5300 offers the highest usable energy density combined with a longer cycle life at broad operating temperatures and unmatched safety features. It is ideal for a wide range of applications including Battery Electric Vehicles (BEVs), Plug-in Hybrid Electric Vehicles (PHEV), Light Commercial Vehicles (LCV), Neighborhood Electric Vehicles (NEV), and Stationary Energy Storage.

Specifications

Nominal capacity [1]		5300 mAh
Nominal energy [1]		19.3 Wh
Nominal voltage		3.65 V
Energy density	Gravimetric	207 Wh/kg
	Volumetric	490 Wh/L
Nominal cell impedance		15.5 mΩ
Cycle life (0.5C discharge at 23°C)	100% DOD	>1000 cycles
	90% DOD	>2000 cycles
	80% DOD	>3000 cycles
Max continuous discharge rate (0 -100% SOC)		13 A
Allowable 10s pulse capability[2]		1000 W/kg
Standard charging method	Constant current (CC)	3.7A (0.7C) to 4.2V
	Constant voltage (CV)	4.2V to 50 mA
Max charge rate (continuous)		10.6 A
Nominal cell weight		93.5 g
Operating Temperature	Charge	-20 to +60 °C
	Discharge	-40 to +70 °C
Storage Temperature		-40 to +60 °C

[1] Standard discharge 0.2C to 2.75 V
[2] 0% to 50% DOD

Certifications

UN 38.3, UL1642, IEC 62133, ROHS 2002/95/EC
In Process: Nordic Ecolabel

Cycle Life at 100% Depth of Discharge (DOD)

Appendix 4. Table of anatomical dimensions and recommended tube lengths (cm)

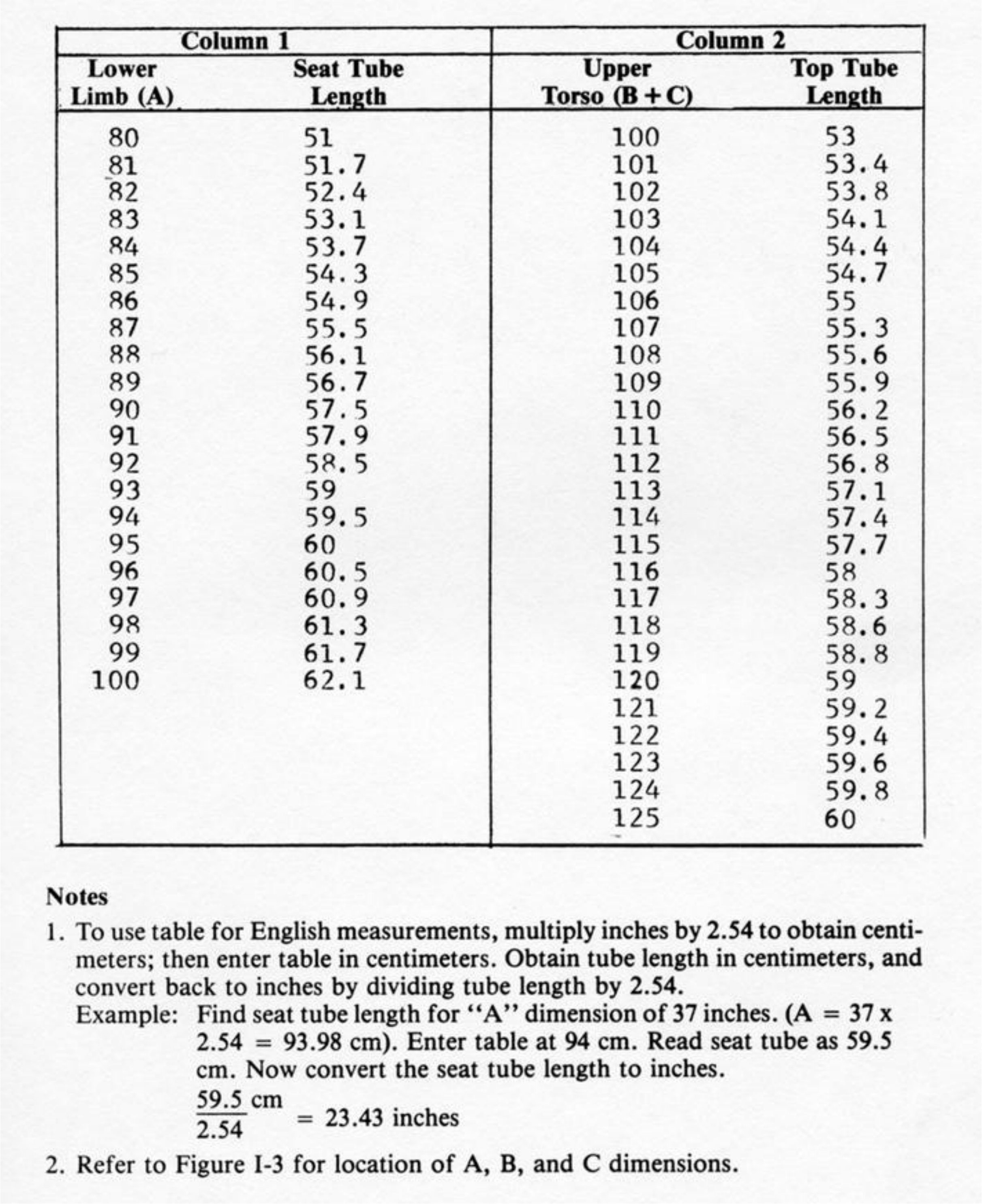

Column 1		Column 2	
Lower Limb (A)	Seat Tube Length	Upper Torso (B + C)	Top Tube Length
80	51	100	53
81	51.7	101	53.4
82	52.4	102	53.8
83	53.1	103	54.1
84	53.7	104	54.4
85	54.3	105	54.7
86	54.9	106	55
87	55.5	107	55.3
88	56.1	108	55.6
89	56.7	109	55.9
90	57.5	110	56.2
91	57.9	111	56.5
92	58.5	112	56.8
93	59	113	57.1
94	59.5	114	57.4
95	60	115	57.7
96	60.5	116	58
97	60.9	117	58.3
98	61.3	118	58.6
99	61.7	119	58.8
100	62.1	120	59
		121	59.2
		122	59.4
		123	59.6
		124	59.8
		125	60

Notes

1. To use table for English measurements, multiply inches by 2.54 to obtain centimeters; then enter table in centimeters. Obtain tube length in centimeters, and convert back to inches by dividing tube length by 2.54.
   Example: Find seat tube length for "A" dimension of 37 inches. (A = 37 x 2.54 = 93.98 cm). Enter table at 94 cm. Read seat tube as 59.5 cm. Now convert the seat tube length to inches.
   $$\frac{59.5\text{ cm}}{2.54} = 23.43\text{ inches}$$
2. Refer to Figure I-3 for location of A, B, and C dimensions.

Appendix 5. Bicycle frameset geometry drawing

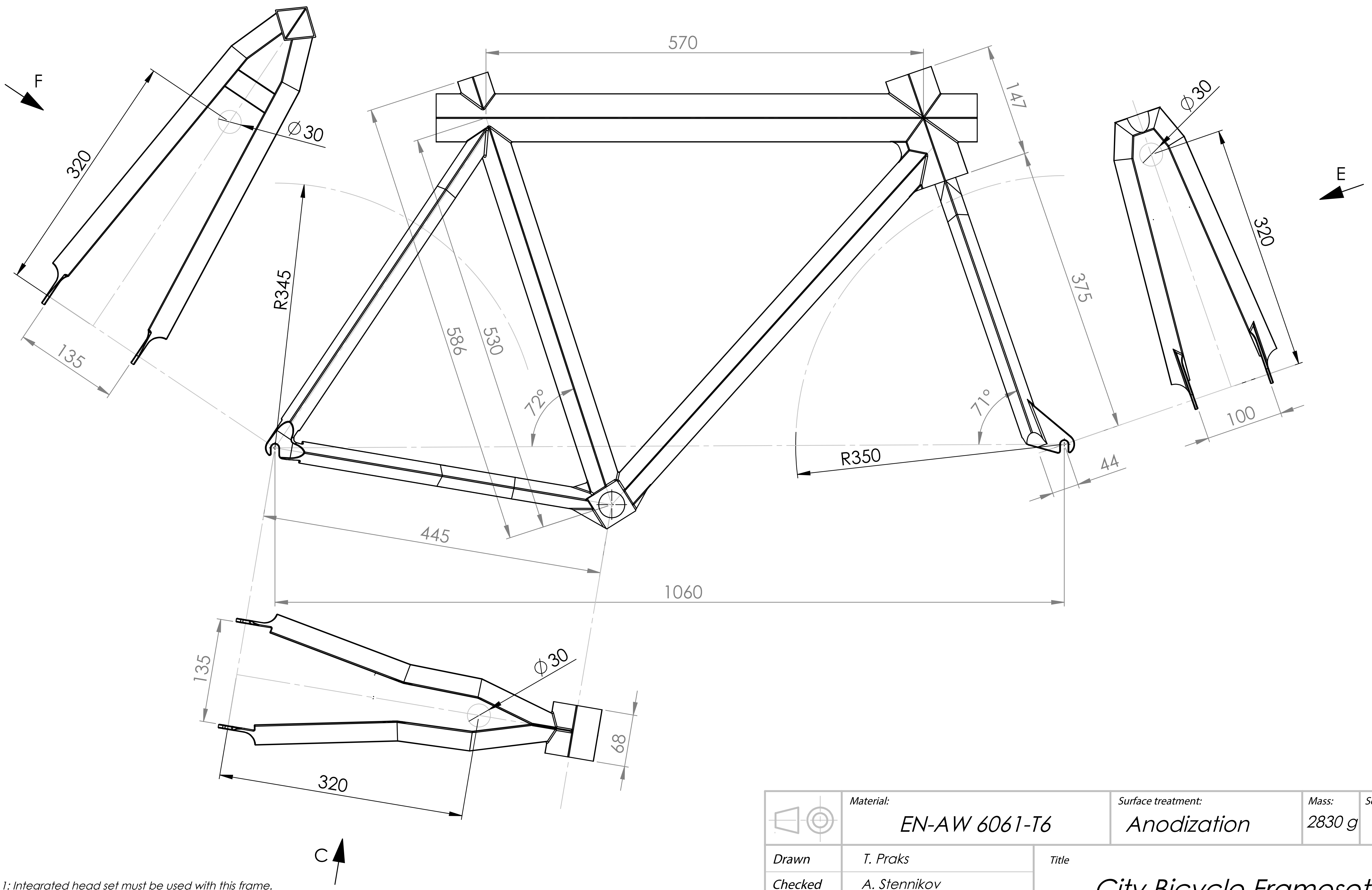

Note 1: Integrated head set must be used with this frame.

Note 2: The frame requieres seatpost with 25.4 mm outer diameter.

Note 3: The correct bottom bracket size for this frame is 68 mm

Note 5: Dimensions have informative purpose

Material: EN-AW 6061-T6
Surface treatment: Anodization
Mass: 2830 g
Scale: 1:5

Drawn: T. Praks
Checked: A. Stennikov
Approved: K. Maruste

Title: City Bicycle Frameset

COMODULE GmbH
Sheet: 1/1
Document nr: 01.123.00
Format: A3

Appendix 6. Bicycle general control system architecture

GENERAL CONTROL SYSTEM ARCHITECTURE

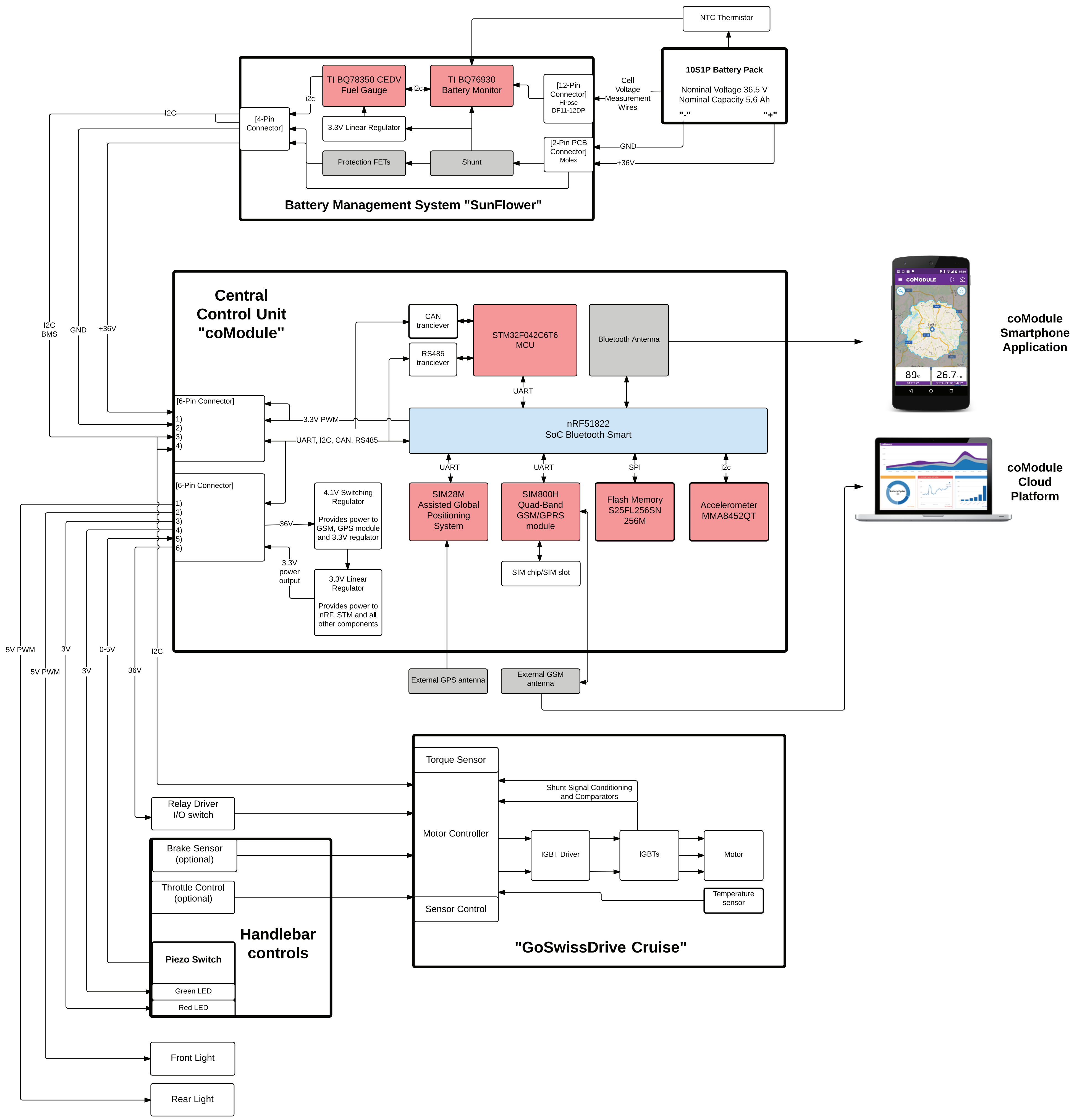

Title: General Control System Architecture	20.05.2015
Author: Teet Praks	Sheet: 1 of 1